RAJA KISHORE CHANDRA
ACADEMY OF TECHNOLOGY

CIRCUIT AND NETWORK THEORY

3rd SEMESTER, ELECTRICAL ENGINEERING

RAJAKISHORE CHANDRA ACADEMY OF TECHNOLOGY,NILGIRI,BALASORE

ODISHA - 756040

PREPARED BY:

ER. MANOJ KU. PARIDA

CHAPTER 1

Magnetic Circuits

Introduction :

Magnetic flux lines always form closed loops. The closed path followed by the flux lines is called a magnetic circuit. Thus, a magnetic circuit provides a path for magnetic flux, just as an electric circuit provides a path for the flow of electric current. In general, the term magnetic circuit applies to any closed path in space, but in the analysis of electro-mechanical and electronic system this term is specifically used for circuits containing a major portion of ferromagnetic materials. The study of magnetic circuit concepts is essential in the design, analysis and application of electromagnetic devices like transformers, rotating machines, electromagnetic relays etc.

Magnetomotive Force (M.M.F) :

Flux is produced round any current – carrying coil. In order to produce the required flux density, the coil should have the correct number of turns. The product of the current and the number of turns is defined as the coil magneto motive force (m.m.f).

If I = Current through the coil (A)
N = Number of turns in the coil.
Magnetomotive force = Current x turns

So M.M.F = I X N
The unit of M.M.F. is ampere–turn (AT) but it is taken as Ampere(A) since N has no dimensions.

Magnetic Field Intensity:

Magnetic Field Intensity is defined as the magneto-motive force per unit length of the magnetic flux path. Its symbol is H.

$$\text{Magnetic field Intensity (H)} = \frac{\text{Magnetomotive force}}{\text{Mean length of the magnetic path}}$$

- $H = \frac{F}{l} = \frac{I.N.}{l}$ A/m

Where *l* is the mean length of the magnetic circuit in meters. Magnetic field intensity is also called magnetic field strength or magnetizing force.

Permeability :-

Every substance possesses a certain power of conducting magnetic lines of force. For example, iron is better conductor for magnetic lines of force than air (vaccum) . Permeability of a material (μ) is its conducting power for magnetic lines of force. It is the ratio of the flux density. (B) Produced in a material to the magnetic filed strength (H).

$$\text{i.e. } \mu = B/H$$

Reluctance :

Reluctance (s) is akin to resistance (which limits the electric Current).

Flux in a magnetic circuit is limited by reluctance. Thus reluctance(s) is a measure of the opposition offered by a magnetic circuit to the setting up of the flux.

Reluctance is the ratio of magneto motive force to the flux. Thus

$$S = Mmf/\phi$$

Its unit is ampere turns per webber (or AT/wb).

Permeance:-

The reciprocal of reluctance is called the permeance (symbol A).

Permeance (A) = 1/S wb/AT

Turn T has no unit.

Hence permeance is expressed in wb/A or Henerys(H).

B.H. Curve :

Place a piece of an unmagnetised iron bar AB within the field of a solenoid to magnetise it. The field H produced by the solenoid, is called magnetising field, whose value can be altered (increased or decreased) by changing (increasing or decreasing) the current through the solenoid. If we increase slowly the value of magnetic field (H) from zero to maximum value, the value of flux density (B) varies along 1 to 2 as shown in the figure and the magnetic materials (i.e iron bar) finally attains the maximum value of flux density (Bm) at point 2 and thus becomes magnetically saturated.

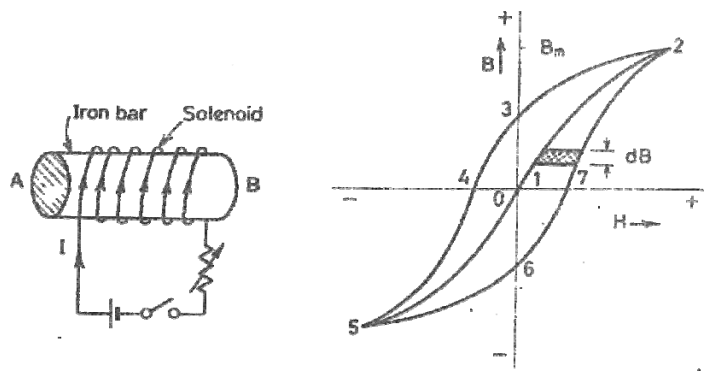

Fig. 2.1

Now if value of H is decreased slowly (by decreasing the current in the solenoid) the corresponding value of flux density (B) does not decreases along 2-1 but decreases some what less rapidly along 2 to 3. Consequently during the reversal of magnetization, the value of B is not zero, but is '13' at H= 0. In other wards, during the period of removal of magnetization force (H), the iron bar is not completely demagnetized.

In order to demagnetise the iron bar completely, we have to supply the demagnetisastion force (H) in the opposite direction (i.e. by reserving the direction of current in the solenoid). The value of B is reduced to zero at point 4,

when H='14'. This value of H required to clear off the residual magnetisation, is known as coercive force i.e. the tenacity with which the material holds to its magnetism.

If after obtaining zero value of magnetism, the value of H is made more negative, the iron bar again reaches, finally a state of magnetic saturation at the point 5, which represents negative saturation. Now if the value of H is increased from negative saturation (= '45') to positive saturation (= '12') a curve '5,6,7,2' is obtained. The closed loop "2,3,4,5,6,7,2" thus represents one complete cycle of magnetisation and is known as hysteresis loop.

CHAPTER 02

COUPLED CIRCUITS

It is defined as the interconnected loops of an electric network through the magnetic circuit.

There are two types of induced emf.
(1) Statically Induced emf.
(2) Dynamically Induced emf.

Faraday's Laws of Electro-Magnetic :
Introduction → First Law :→
Whenever the magnetic flux linked with a circuit changes, an emf is induced in it.
OR
Whenever a conductor cuts magnetic flux an emf is induced in it.
Second Law :→
It states that the magnitude of induced emf is equal to the rate of change of flux linkages.
OR
The emf induced is directly proportional to the rate of change of flux and number of turns

Mathematically :

$$e \propto \frac{d\phi}{dt}$$

$$e \propto N$$

Or

$$e = -N\frac{d\phi}{dt}$$

Where e = induced emf

N = No. of turns

ϕ = flux

'- ve' sign is due to Lenz's Law

Inductance :→

It is defined as the property of the substance which opposes any change in Current & flux.

Unit :→ Henry

Fleming's Right Hand Rule:→

It states that "hold your right hand with fore-finger, middle finger and thumb at right angles to each other. If the fore-finger represents the direction of field, thumb represents the direction of motion of the conductor, then the middle finger represents the direction of induced emf."

Lenz's Law : →

It states that electromagnetically induced current always flows in such a direction that the action of magnetic field set up by it tends to oppose the vary cause which produces it.

OR

It states that the direction of the induced current (emf) is such that it opposes the change of magnetic flux.

(2) **Dynamically Induced emf :→**

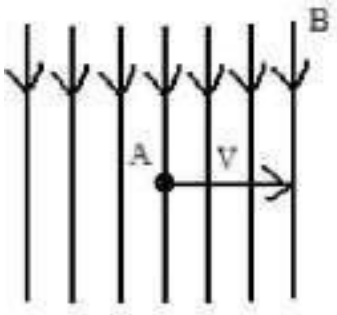

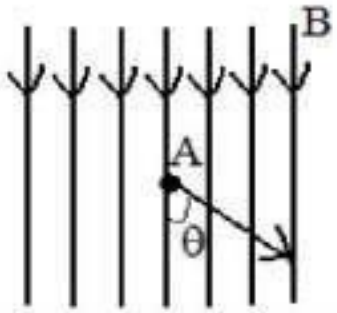

In this case the field is stationary and the conductors are rotating in an uniform magnetic field at flux density 'B" Wb/mt2 and the conductor is lying perpendicular to the magnetic field. Let '*l*' is the length of the conductor and it moves a distance of 'dx' nt in time 'dt' second.

The area swept by the conductor = *l. dx*
Hence the flux cut = *ldx. B*
Change in flux in time 'dt' second =

$$\frac{Bldx}{dt}$$

$$E = \boldsymbol{Blv}$$

If the conductor is making an angle ‘θ’ with the magnetic field, then

$e = Blv \sin\theta$

(1) Statically Induced emf :→

Here the conductors are remain in stationary and flux linked with it changes by increasing or decreasing.

It is divided into two types .

(i) Self-induced emf.

(ii) Mutually-induced emf.

(i) Self-induced emf : → It is defined as the emf induced in a coil due to the change of its own flux linked with the coil.

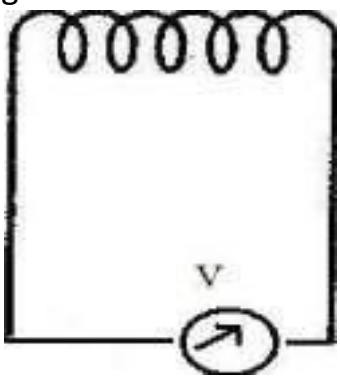

If current through the coil is changed then the flux linked with its own turn will also change which will produce an emf is called self-induced emf.

Self-Inductance :→

It is defined as the property of the coil due to which it opposes any change (increase or decrease) of current or flux through it.

Co-efficient of Self-Inductance (L) :→

It is defined as the ratio of weber turns per ampere of current in the coil.

OR

It is the ratio of flux linked per ampere of current in the coil.

1st Method for 'L' :→

$$L = \frac{N\phi}{I}$$

Where L = Co-efficient of self-induction

N = Number of turns

ϕ = flux I =

Current

2nd

Method

for L :→

We know that

$$L = \frac{N\phi}{I}$$

$$\Rightarrow LI = N\phi$$

$$\Rightarrow -LI = -N\phi$$

$$\Rightarrow -L\frac{dI}{dt} = -N\frac{d\phi}{dt}$$

$$\Rightarrow -L\frac{dI}{dt} = -N\frac{d\phi}{dt}$$

$$\Rightarrow -L\frac{dI}{dt} = e_L$$

$$\Rightarrow L\frac{dI}{dt} = -e_L$$

$$\boxed{\Rightarrow L = \frac{-e_L}{\frac{dI}{dt}}}$$

Where L = Inductance

$e_L = -N\frac{d\phi}{dt}$ is known as self-induced emf.

When $\frac{dI}{dt} = 1 amp/sec.$

e = 1 volt L

= 1 Henry

A coil is said to be a self-inductance of 1 Henry if 1 volt is induced in it. When the current through it changes at the rate of 1 amp/ sec.

3rd Method for L :→

$$L = \frac{M_o M_r A N^2}{l}$$

Where A = Area of x-section of the coil

N = Number of turns

L = Length of the coil

(ii) Mutually Induced emf :→

It is defined as the emf induced in one coil due to change in current in other coil. Consider two coils 'A' and 'B' lying close to each other. An emf will be induced in coil 'B' due to change of current in coil 'A' by changing the position of the rheostat.

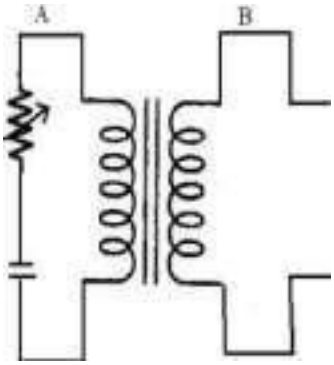

Mutual Inductance :→

It is defined as the emf induced in coil 'B' due to change of current in coil 'A' is the ratio of flux linkage in coil 'B' to 1 amp. Of current in coil 'A'.

Co-efficient of Mutual Inductance (M):

Coefficient of mutual inductance between the two coils is defined as the weber-turns in one coil due to one ampere current in the other.

1st Method for 'M' :→

$$M = \frac{N_2 \phi_1}{I_1}$$

N_2 = Number of turns
M = Mutual
Inductance ϕ_1 = flux
linkage I_1 = Current in
ampere

2nd Method for M :→

We know that

$$M = \frac{N_2 \phi_1}{I_1}$$

$\Rightarrow MI_2 = N_2\,\phi_1 \Rightarrow -MI_1 = N_2\,\phi_1$

$$\Rightarrow -M\frac{dI_1}{dt} = -N_2\frac{d\phi_1}{dt}$$

$$\Rightarrow -M\frac{dI_1}{dt} = e_M$$

$$\Rightarrow M\frac{dI_1}{dt} = -e_M$$

$$\boxed{\Rightarrow M = \frac{-e_M}{\frac{dI_1}{dt}}}$$

Where

$$e_M = -N_2\frac{d\phi_1}{dt}$$

$e_M = -1$ *VOLT*

Then M = 1 Henry

A coil is said to be a mutual inductance of 1 Henry when 1 volt is induced when the current of 1 amp/sec. is changed in its neighbouring coil.

3rd Method for M :→

$$M = \frac{M_o M_r A N_1 N_2}{l}$$

Co-efficient of Coupling :

Consider two magnetically coupled coils having N_1 and N_2 turns respectively. Their individual co-efficient of self-inductances are

$$L_1 = \frac{M_o M_r A N_1^2}{l}$$

$$L_2 = \frac{M_o M_r A N_2^2}{l}$$

The flux ϕ_1 produced in coil 'A' due to a current of I_1 ampere is

$$\phi_1 = \frac{L_1 I_1}{N_1} = \frac{M_o M_r A N_1^2}{l} \times \frac{I_1}{N_1}$$

$$\phi_1 = \frac{M_o M_r A N_1 I_1}{l}$$

Suppose a fraction of this flux i.e. $K_1\phi_1$ is linked with coil 'B'

Then $M = \frac{K_1\phi_1}{I_1} \times N_2 = \frac{K_1 N_1 N_2}{l / M_o M_r A}$ ----------(1)

Similarly the flux ϕ_2 produced in coil 'B' due to I_2 amp. Is

$$\phi_2 = \frac{M_o M_r A N_2 I_2}{l}$$

Suppose a fraction of this flux i.e. $K_2\phi_2$ is linked with coil 'A'

Then $M = \frac{K_2\phi_2}{I_2} \times N_1 = \frac{K_2 N_2 N_1}{l / M_o M_r A}$ ----------(2)

Multiplying equation (1) & (2)

$$M^2 = \frac{K_1 K_2 N_1^2 N_2^2}{l^2 / M_0^2 M_r^2 A^2} \times N_1$$

$$= K^2 \left(\frac{M_o M_r A N_1^2}{l} \right) \left(\frac{M_o M_r A N_2^2}{l} \right)$$

$$[\because K_1 = K_2 = K]$$

$$M^2 = K^2 L_1 L_2$$

$$K^2 = \frac{M^2}{L_1 L_2}$$

$$\boxed{\Rightarrow K = \sqrt{\frac{M}{L_1 L_2}}}$$

Where 'K' is known as the co-efficient of coupling.

Co-efficient of coupling is defined as the ratio of mutual inductance between two coils to the square root of their self- inductances.

Inductances In Series (Additive) :→

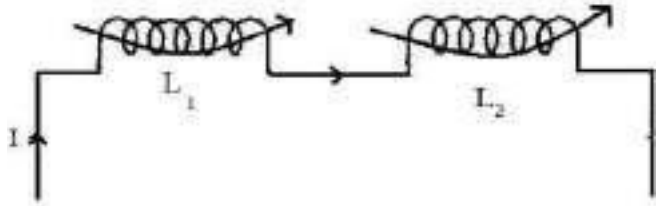

Fluxes are in the same direction

Let M = Co-efficient of mutual inductance L_1 = Co-efficient of self-inductance of first coil.

L_2 = Co-efficient of self-inductance of second coil.

EMF induced in first coil due to self-inductance

$$e_{L_1} = -L_1 \frac{dI}{dt}$$

Mutually induced emf in first coil

$$e_{M_1} = -M \frac{dI}{dt}$$

EMF induced in second coil due to self induction

$$e_{L_2} = -L_2 \frac{dI}{dt}$$

Mutually induced emf in second coil

$$e_{M_2} = -M \frac{dI}{dt}$$

Total induced emf

$E = e_{L1} + e_{L2} + e_{m1} + e_{m2}$

If 'L' is the equivalent inductance, then

$$-L\frac{dI}{dt} = -L_1\frac{dI}{dt} - M\frac{dI}{dt} - L_2\frac{dI}{dt} - M\frac{dI}{dt}$$

$$\Rightarrow -L\frac{dI}{dt} = -\frac{dI}{dt}(L_1 - L_2 - 2M)$$

$$\boxed{\Rightarrow L = L_1 + L_2 + 2M}$$

Inductances In Series (Substnactive) :→

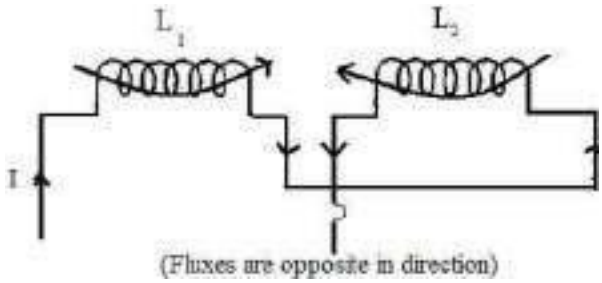

Let M = Co-efficient of mutual inductance

L_1 = Co-efficient of self-inductance of first coil

L_2 -= Co-efficient of self-inductance of second coil

Emf induced in first coil due to self induction

$$e_{L_1} = -L_1 \frac{dI}{dt}$$

Mutually induced emf in first coil

$$e_{M_1} = -\left(-M\frac{dI}{dt}\right) = M\frac{dI}{dt}$$

Emf induced in second coil due to self-induction

$$e_{L_2} = -L_2 \frac{dI}{dt}$$

Mutually induced emf in second coil

$$e_{M_2} = -\left(-M\frac{dI}{dt}\right) = M\frac{dI}{dt}$$

Total induced emf

$e = e_{L_1} + e_{L_2} + e_{M_1} + e_{M_2}$

Then

$$-L\frac{dI}{dt} = -L_1\frac{dI}{dt} - L_2\frac{dI}{dt} + M\frac{dI}{dt} + M\frac{dI}{dt}$$

$$\Rightarrow -L\frac{dI}{dt} = -\frac{dI}{dt}(L_1 + L_2 - 2M) \qquad \Rightarrow L = L_1 + L_2 - 2M$$

Inductances In Parallel :→

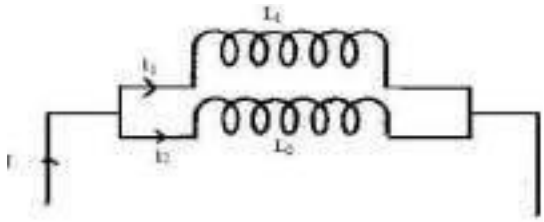

Let two inductances of L_1 & L_2 are connected in parallel Let the co-efficent of mutual inductance between them is M.

$I - i_1 + i_2$

$$\frac{dI}{dt} = \frac{di_1}{dt} + \frac{di_2}{dt} \text{ ---------- } (1)$$

$$e = L_1 \frac{di_1}{dt} + M \frac{di_2}{dt}$$

$$= L_2 \frac{di_2}{dt} + M \frac{di_1}{dt}$$

$$\Rightarrow L_1 \frac{di_1}{dt} + M \frac{di_2}{dt} = L_2 \frac{di_2}{dt} + M \frac{di_1}{dt}$$

$$\Rightarrow (L_1 - M) \frac{di_1}{dt} = (L_2 - M) \frac{di_2}{dt}$$

$$\Rightarrow \frac{di_1}{dt} = \frac{(L_2 - M)}{(L_1 - M)} \frac{di_2}{dt} \text{ ----------} (2)$$

$$\frac{dI}{dt} = \frac{di_1}{dt} + \frac{di_2}{dt}$$

$$= \frac{(L_2 - M)}{(L_1 - M)} \frac{di_2}{dt} + \frac{di_2}{dt}$$

$$\Rightarrow \frac{dI}{dt} = \left(\frac{L_2 - M}{L_1 - M} + 1 \right) \frac{di_2}{dt} \text{ ----------} (3)$$

If ‘L’ is the equivalent inductance

$$e = L \frac{di}{dt} = L_1 \frac{di_1}{dt} + M \frac{di_2}{dt}$$

$$L \frac{di}{dt} = L_1 \frac{di_1}{dt} + M \frac{di_2}{dt}$$

$$\Rightarrow \frac{di}{dt} = \frac{1}{L} \left(L_1 \frac{di_1}{dt} + M \frac{di_2}{dt} \right) \text{ ----------} (4)$$

Substituting the value of $\frac{di_1}{dt}$

$$\frac{di}{dt} = \frac{1}{L} \left[L_1 \frac{L_2 - M}{L_1 - M} + M \right] \frac{di_2}{dt} \text{ ----------} (5)$$

Equating equation (3) & (5)

$$\left[\left(\frac{L_2-M}{L_1-M}\right)+1\right]\frac{di_2}{dt}=\frac{1}{L}\left[L_1\left(\frac{L_2-M}{L_1-M}\right)+M\right]\frac{di_2}{dt}$$

$$\Rightarrow \frac{L_2-M}{L_1-M}+1=\frac{1}{L}\left[L_1\left(\frac{L_2-M}{L_1-M}\right)+M\right]$$

$$\Rightarrow \frac{L_2-M+L_1-M}{L_1-M}=\frac{1}{L}\left[\frac{L_1L_2-L_1M+L_1M-M^2}{L_1-M}\right]$$

$$\Rightarrow \frac{L_1+L_2-2M}{L_1-M}=\frac{1}{L}\left[\frac{L_1L_2-M^2}{L_1-M}\right]$$

$$\Rightarrow L_1+L_2-2M=\frac{1}{L}\left[L_1L_2-M^2\right]$$

$$\boxed{\Rightarrow L=\frac{L_1L_2-M^2}{L_1+L_2-2M}}$$

When mutual field assist.

$$L=\frac{L_1L_2-M^2}{L_1+L_2+2M}$$

When mutual field opposes.

Exp. -01 :

Two coupled cols have self inductances $L_1 = 10\times10^{-3}$H and $L_2 = 20\times10^{-3}$H. The coefficient of coupling (K) being 0.75 in the air, find voltage in the second coil and the flux of first coil provided the second coils has 500 turns and the circuit current is given by i_1 = 2sin 314.1A. **Solution :**

$M=K\sqrt{L1L2}$

$M = 0.75\sqrt{10\times10^{-3}\times 20\times10^{-3}}$

$\Rightarrow M = 10.6\times10^{-3}H$

The voltage induced in second coil is

$V^2=M\frac{di1}{dt}$

$=10.6\times10^{-3}\times 2\times314\cos 314dt.$

The magnetic circuit being linear,

$$M = \frac{N_2\phi_2}{i_1} = \frac{500 \times (K\phi_1)}{i_1}$$

$$\phi = \frac{M}{500 \times K} \times i_1 = \frac{10.6 \times 10^{-3}}{500 \times 0.75} \times 2\sin 314t$$

$$= 5.66 \times 10^{-5} \sin 314t$$

Exp. 02

Find the total inductance of the three series connected coupled coils.Where the self and mutual inductances are

L_1 = 1H, L_2 = 2H, L_3 = 5H M_{12}=

0.5H, M_{23} = 1H, M_{13} = 1H

Solution: $L_A = L_1 + M_{12} + M_{13}$

= 1 + 20.5 +1

= 2.5H

$L_B = L_2 + M_{23} + M_{12}$

= 2 + 1 + 0.5

= 3.5H

$L_C = L_3 + M_{23} + M_{13}$

= 5 + 1 + 1

= 7H

Total inductances are

$L_{ea} = L_A + L_B + L_c$

= 2.5 + 3.5 + 7

= 13H (Ans)

CHAPTER 3

Circuit Elements and analysis

1.1 Voltage

Energy is required for the movement of charge from one point to another. Let W Joules of energy be required to move positive charge Q columbs from a point a to point b in a circuit. We say that a voltage exists between the two points. The voltage V between two points may be defined in terms of energy that would be required if a charge were transferred from one point to the other. Thus, there can be a voltage between two points even if no charge is actually moving from one to the other. Voltage between a and b is given by

$$V = \frac{W}{Q} J / C$$

$$\text{Hence Electric Potential (V)} = \frac{\text{Worked are (W) in Joules}}{\text{Ch arge (Q)in columbs}}$$

Current :

An electric current is the movement of electric charges along a definite path. In case of a conductor the moving charges are electrons.

The unit of current is the ampere. The ampere is defined as that current which when flowing in two infinitely long parallel conductors of negligible cross section, situated 1 meter apart in Vacuum, produces between the conductors a force of 2×10^{-7} Newton per metre length.

Power : Power is defined as the work done per unit time. If a field F newton acts for t seconds through a distance d metres along a straight line, work done W = Fxd N.m. or J.

The power P, either generated or dissipated by the circuit element.

$$P = \frac{w}{t} = \frac{F \times d}{t}$$

Power can also be written as Power = $\frac{\text{Work}}{\text{time}}$

$= \frac{\text{Work}}{\text{Charge}} \times \frac{\text{Charge}}{\text{Time}} = \text{Voltage} \times \text{Current}$

P = V x I watt.

Energy : Electric energy W is defined as the Power Consumed in a given time. Hence, if current IA flows in an element over a time period t second, when a voltage V volts is applied across it, the energy consumed is given by

W = P x t = V x I x t J or watt. second.

The unit of energy W is Joule (J) or watt. second. However, in practice, the unit of energy is kilowatt. hour (Kwh)

1.2 **Resistance** : According to Ohm's law potential difference (V) across the ends of a conductor is proportional to the current (I) flowing through the conductor at a constant temperature. Mathematically Ohm's law is expressed as

$V \alpha I$ or $V = R \times I$

Or $R = \frac{V}{I}$ where R is the proportionality constant and is designated as the conductor resistance and has the unit of Ohm (Ω).

Conductance : Voltage is induced in a stationary conductor when placed in a varying magnetic field. The induced voltage (e) is proportional to the time rate of change of current, di/dt producing the magnetic field.

Therefore $e \alpha \frac{di}{dt}$

Or $e = L \frac{di}{}$

dt

e and i are both function of time. The proportionality constant L is called inductance. The Unit of inductance is Henery (H).

Capacitance : A capacitor is a Physical device, which when polarized by an electric field by applying a suitable voltage across it, stores energy in the form of a charge separation.

The ability of the capacitor to store charge is measured in terms of capacitance. Capacitence of a capacitor is defined as the charge stored per Volt applied.

$$C = \frac{q}{v} = \text{Farad} = \frac{\text{Coulomb}}{\text{Volt}}$$

1.3 Active and passive Branch :

A branch is said to be active when it contains one or more energy sources. A passive branch does not contain an energy source.

Branch : A branch is an element of the network having only two terminals.

Bilateral and unilateral element :

A bilateral element conducts equally well in either direction. Resistors and inductors are examples of bilateral elements. When the current voltage relations are different for the two directions of current flow, the element is said to be unilateral. Diode is an unilateral element.

Linear Elements : When the current and voltage relationship in an element can be simulated by a linear equation either algebraic, differential or integral type, the element is said to be linear element.

Non Linear Elements : When the current and voltage relationship in an element can not be simulated by a linear equation, the element is said to be non linear elements.

1.4 Kirchhoff's Voltage Law (KVL) :

The algebraic sum of Voltages (or voltage drops) in any closed path or loop is Zero. Application of KVL with series connected voltage source.

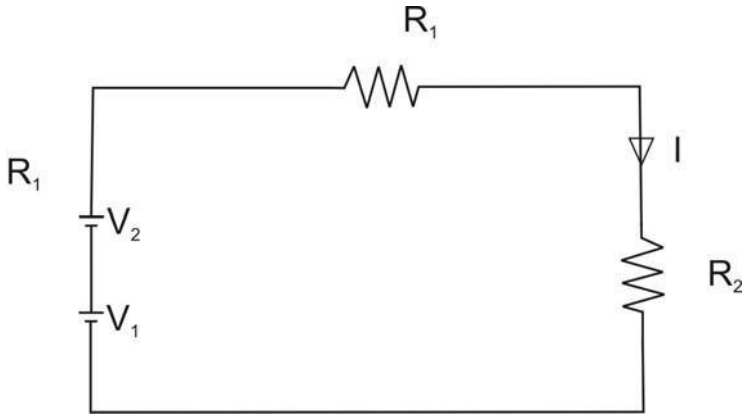

Fig. 1.1

$V_1 + V_2 – IR_1 – IR_2 = 0$

$= V_1 + V_2 = I\ (R_1 + R_2)$

$$I = \frac{V^1 + V^2}{R_1 + R_2}$$

Application of KVL while voltage sources are connected in opposite polarity.

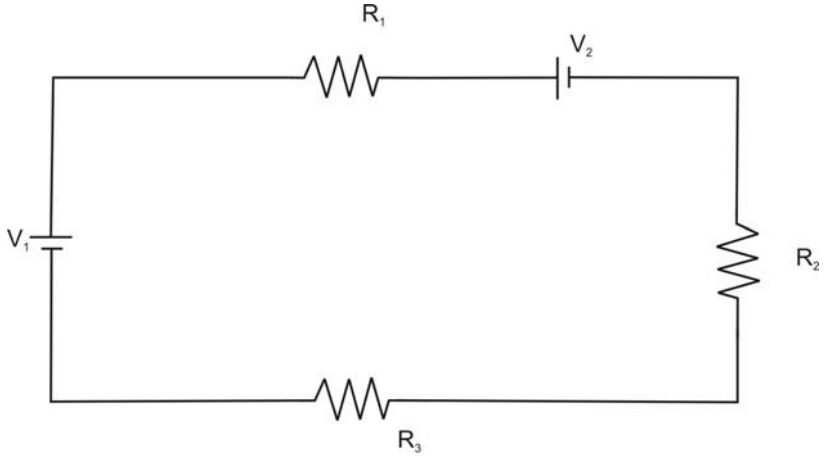

Fig. 1.2

$V_1 – IR_1 – V_2 – IR_2 – IR_3 = 0$

$V_1 – V_2 = IR_1 + IR_2 + IR_3$

- $V_1 - V_2 = I\ (R_1 + IR_2 + IR_3)$
- $I = \dfrac{V^1 - V^2}{R_1 + R_2 + R_3}$

Kirchaoff's Current Law (KCL) :

The algebraic sum of currents meeting at a junction or mode is zero.

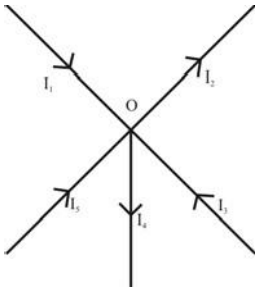

Fig. 1.3

Considering five conductors, carrying currents I_1, I_2, I_3, I_4 and I_5 meeting at a point O. Assuming the incoming currents to be positive and outgoing currents negative.

$$I_1 + (-I_2) + I_3 + (-I_4) + I_5 = 0$$

$$I_1 - I_2 + I_3 - I_4 + I_5 = 0$$

$$I_1 + I_3 + I_5 = I_2 + I_4$$

Thus above Law can also be stated as the sum of currents flowing towards any junction in an electric circuit is equal to the sum of the currents flowing away from that junction.

Voltage Division (Series Circuit)

Considering a voltage source (E) with resistors R_1 and R_2 in series across it.

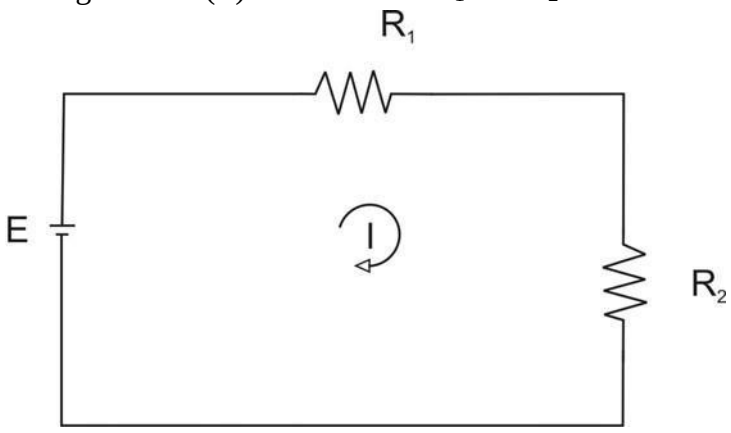

Fig. 1.4

$$I = \frac{E}{R_1 + R_2}$$

$$\text{Voltage drop across } R_1 = I.\ R_1 = \frac{E.R^1}{R_1 + R_2}$$

$$\text{Similarly voltage drop across } R_2 = I.R_2 = \frac{E.R^1}{R_1 + R_2}$$

<u>Current Division</u> :

A parallel circuit acts as a current divider as the current divides in all branches in a parallel circuit.

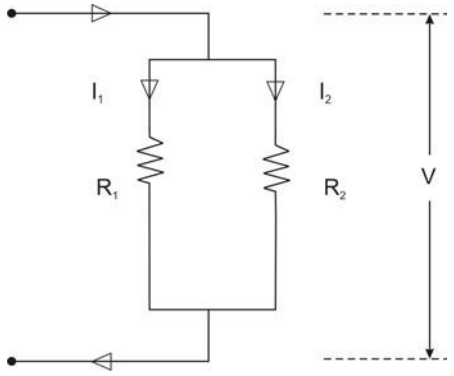

Fig. 1.5

Fig. shown the current I has been divided into I_1 and I_2 in two parallel branches with resistances R_1 and R_2 while V is the voltage drop across R_1 and R_2.

$$I_1 = \frac{V}{R_1} \text{ and } I_2 = \frac{V}{R_2}$$

Let R = Total resistance of the circuit.

$$\text{Hence } = \frac{1}{=} \quad \frac{1}{} + \frac{1}{}$$

$R \qquad R_1 \qquad R_2$

$$R = \frac{R_1R_2}{R_1 + R_2}$$

$$I = \frac{V}{R} = \frac{V}{\frac{R_1R_2}{R_1 + R_2}} = \frac{V(R_1 + R_2)}{R_1R_2}$$

But = $V = I_1R_1 = I_2R_2$

$$I = I_1R_1 \left(\frac{R_1 + R_2}{R_1R_2}\right)$$

$$I = \frac{I_1(R_1 + R_2)}{R_2}$$

Therefore $\boxed{I_1 = \frac{IR_2}{R_1 + R_2}}$

Similarly it can be derived that

$$\boxed{I_2 = \frac{IR_1}{R_1 + R_2}}$$

NETWORK ANALYSIS

Different terms are defined below:

1. **Circuit:** A circuit is a closed conducting path through which an electric current either . flow or is intended flow

2. **Network:** A combination of various electric elements, connected in any manner. Whatsoever, is called an electric network

3. **Node:** it is an equipotential point at which two or more circuit elements are joined.

4. **Junction:** it is that point of a network where three or more circuit elements are joined.

5. **Branch:** it is a part of a network which lies between junction points.

6. **Loop:** It is a closed path in a circuit in which no element or node is accounted more than once.

7. **Mesh:** It is a loop that contains no other loop within it.

Example 3.1 In this circuit configuration of figure 3.1, obtain the no. of i) circuit elements ii) nodes iii) junction points iv) branches and v) meshes.

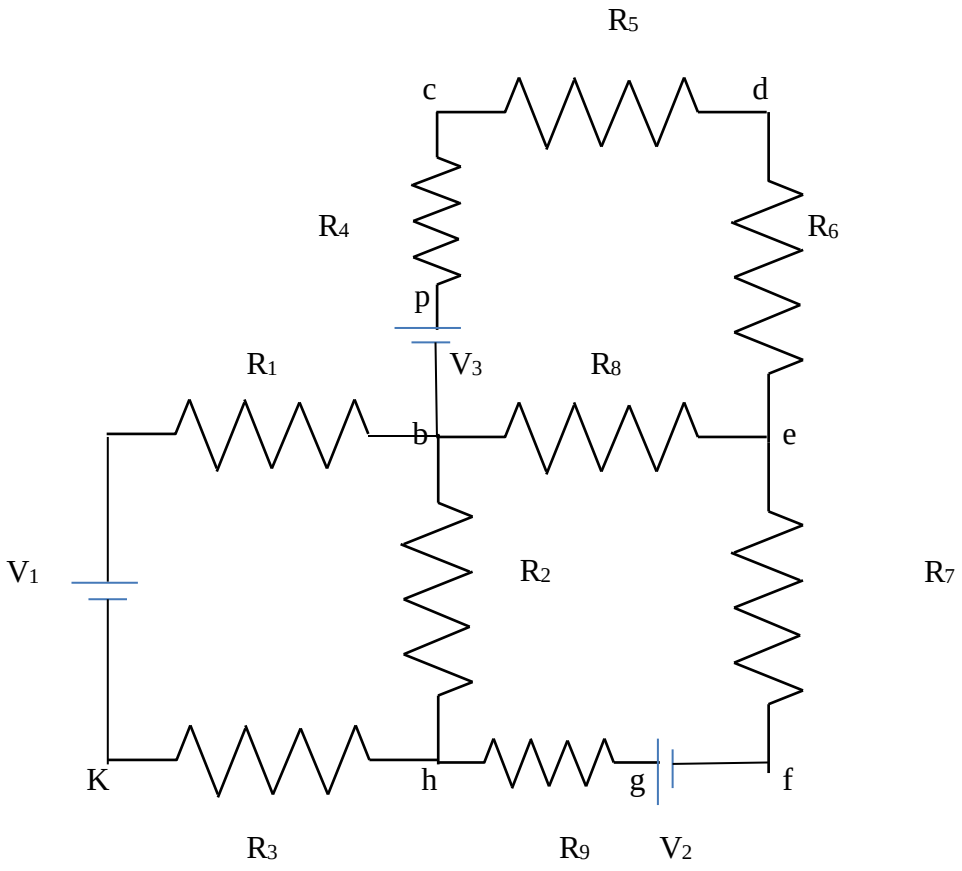

a **Solution:**

i) no. of

circuit

elements =

12 (9

resistors + 3

voltage

sources)

ii) no. of

nodes =10

(a, b, c, d, e,

f, g, h, k, p)

iii) no. of

junction

points =3 (b,

e, h) iv) no.

of branches

= 5 (bcde,

be, bh,

befgh, bakh)

v) no. of meshes = 3 (abhk, bcde, befh)

3.2 MESH ANALYSIS

Mesh and nodal analysis are two basic important techniques used in finding solutions for a network. The suitability of either mesh or nodal analysis to a particular problem depends mainly on the number of voltage sources or current sources .If a network has a large number of voltage sources, it is useful to use mesh analysis; as this analysis requires that all the sources in a circuit be voltage sources. Therefore, if there are any current sources in a circuit they are to be converted into equivalent voltage sources,if, on the other hand, the network has more current sources,nodal analysis is more useful.

Mesh analysis is applicable only for planar networks. For non-planar circuits mesh analysis is not applicable .A circuit is said to be planar, if it can be drawn on a plane surface without crossovers. A non-planar circuit cannot be drawn on a plane surface without a crossover.

Figure 3.2 (a) is a planar circuit. Figure 3.2 (b) is a non-planar circuit and fig. 3.2 (c) is a planar circuit which looks like a non-planar circuit. It has already been discussed that a loop is a closed path. A mesh is defined as a loop which does not contain any other loops within it. To apply mesh analysis, our first step is to check whether the circuit is planar or not and the second is to select mesh currents. Finally, writing Kirchhoff‘s voltage law equations in terms of unknowns and solving them leads to the final solution.

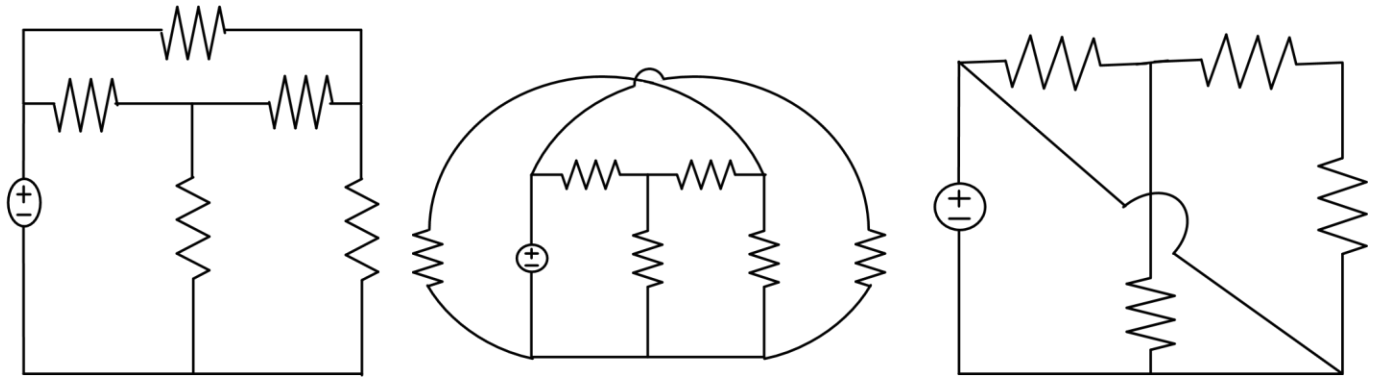

(a) (b) (c)

Figure 3.2

Observation of the Fig.3.2 indicates that there are two loops abefa,and bcdeb in the network .Let us assume loop currents I_1 and $I_2$with directions as indicated in the figure. Considering the loop abefa alone, we observe that current I_1 is passing through R_1, and (I_1-I_2) is passing through R_2. By applying Kirchhoff's voltage law, we can write

$$V_s = I_1R_1+R_2(I_1-I_2) \qquad (3.1)$$

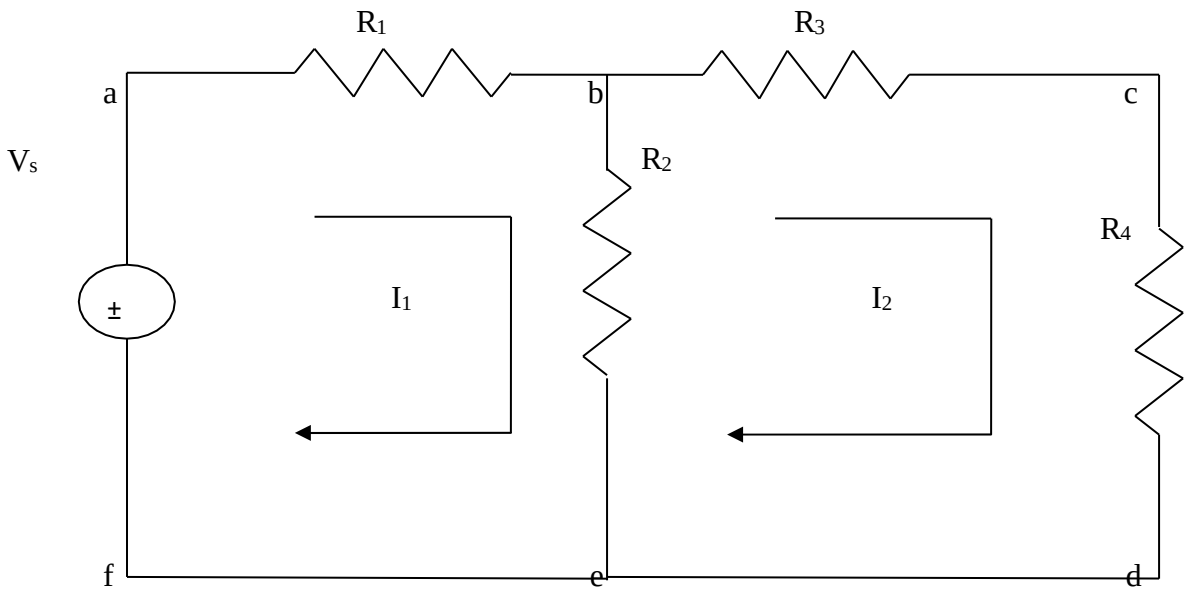

Figure 3.3

Similarly, if we consider the second mesh bcdeb, the current I_2 is passing through R_3 and R_4, and $(I_2 - I_1)$ is passing through R_2. By applying Kirchhoff's voltage law around the second mesh, we have

$$R_2 (I_2-I_1) + R_3I_2 + R_4I_2 = 0 \qquad (3.2)$$

By rearranging the above equations,the corresponding mesh current equations are

$$I_1 (R_1+R_2) - I_2R_2 = V_s.$$

$$-I_1R_2 + (R_2+R_3+R_4) I_2 = 0 \qquad (3.3)$$

By solving the above equations, we can find the currents I_1 and I_2,.If we observe Fig.3.3, the circuit consists of five branches and four nodes, including the reference node.The number of mesh currents is equal to the number of mesh equations.

And the number of equations=branches-(nodes-1).in Fig.3.3, the required number of mesh current would be 5-(4-1)=2.

In general we have B number of branches and N number of nodes including the reference node than number of linearly independent mesh equations M=B-(N-1).

Example 3.2 Write the mesh

current equations in the circuit shown

V 2Ω

50v

in fig 3.4 and determine the currents.

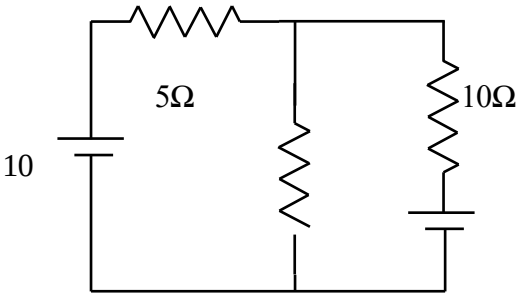

Figure 3.4

Solution: Assume two mesh currents in the direction as indicated in fig. 3.5. The mesh current equations are

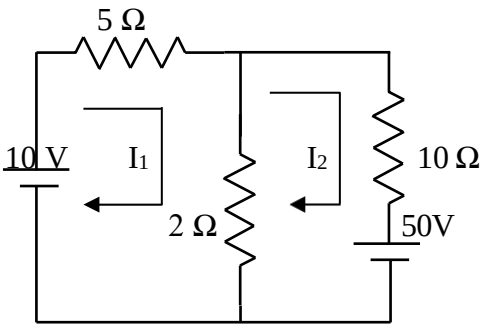

Figure 3.5

$5I_1 + 2(I_1-I_2) = 10$

$101_2 + 2(1_2-1_1) + 50= 0$ (3.4)

We can rearrange the above equations as

$7I_1 -2I_2 =10$

$-2I_1+12I_2 = -50$ (3.5)

By solving the above equations, we have I_1= 0.25 A, and I_2 = -4.125
Here the current in the second mesh I_2, is negative; that is the actual current I_2 flows opposite to the assumed direction of current in the circuit of fig .3.5.

Example 3.3 Determine the mesh current I_1 in the circuit shown in fig.3.6.

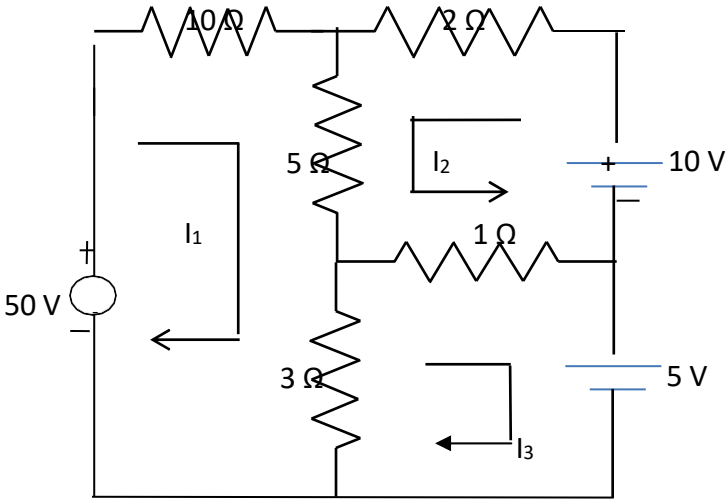

Figure 3.6

Solution: From the circuit, we can from the following three mesh equations

$10I_1+5(I_1+I_2) +3(I_1-I_3) = 50$ (3.6)

$$2I_2 + 5(I_2+I_1) + 1(I_2+I_3) = 10 \qquad (3.7)$$

$$3(I_3-I_1) + 1(I_3+I_2) = -5 \qquad (3.8)$$

Rearranging the above equations we get

$$18I_1+5I_2-3I_3=50 \qquad (3.9)$$

$$5I_1+8I_2 + I_3=10 \qquad (3.10)$$

$$-3I_1 + I_2+ 4I_3=-5 \qquad (3.11)$$

According to the Cramer's rule

$$I_1=\frac{\begin{vmatrix} 50 & 5 & -3 \\ 10 & 8 & 1 \\ -5 & 5 & 4 \end{vmatrix}}{\begin{vmatrix} 18 & 5 & -3 \\ 5 & 8 & 1 \\ -3 & 6 & 4 \end{vmatrix}} = \frac{1175}{35}$$

Or I_1= 3.3 A Similarly,

$$I_2=\frac{\begin{vmatrix} 18 & 50 & -3 \\ 5 & 10 & 1 \\ -3 & -5 & 4 \end{vmatrix}}{\begin{vmatrix} 18 & 5 & -3 \\ 5 & 8 & 1 \\ -3 & 6 & 4 \end{vmatrix}} = \frac{-355}{356}$$

Or I_2=-0.997A

(3.12)

$$I_3 = \frac{\begin{vmatrix} 18 & 5 & 50 \\ 5 & 8 & 10 \\ -3 & 5 & -5 \end{vmatrix}}{\begin{vmatrix} 18 & 5 & -3 \\ 5 & 8 & 1 \\ -3 & 5 & 4 \end{vmatrix}} = \frac{525}{356}$$

Or I_3=1.47A (3.13)

$\therefore I_1$=3.3A, I_2=-0.997A, I_3=1.47A

3.3 MESH EQUATIONS BY INSPECTION METHOD The mesh equations for a general planar network can be written by inspection without going through the detailed steps. Consider a three mesh networks as shown in figure 3.7

The loop equation are $I_1R_1 + R_2(I_1-I_2) = V_1$

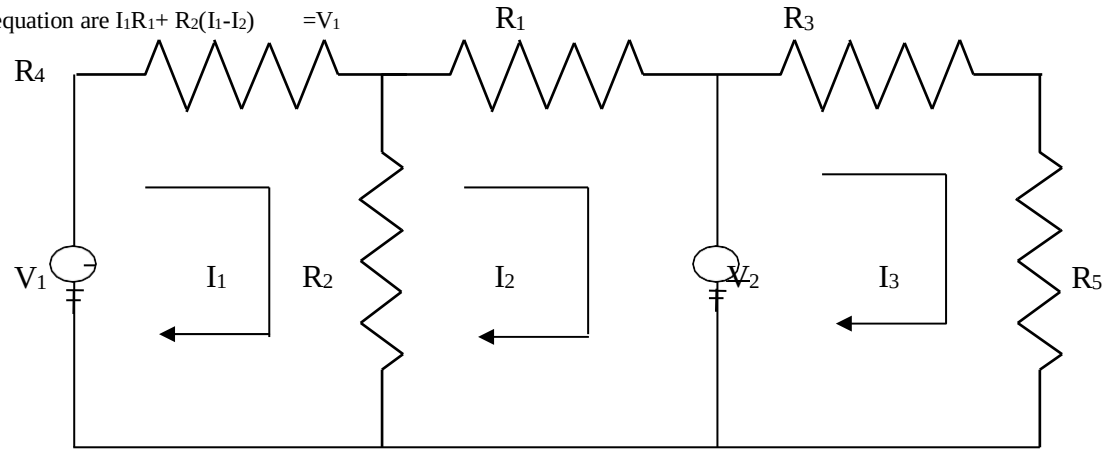

Figure 3.7

$R_2(I_2-I_1)+I_2R_3 = -V_2$ 3.14

$R_4I_3+R_5I_3=V_2$ 3.15

Reordering the above equations, we have

$(R_1+R_2)I_1-R_2I_2=V_1$ 3.16

$-R_2I_1+(R_2+R_3)I_2=-V_2$ 3.17

$(R_4+R_5)I_3=V_2$ 3.18

The general mesh equations for three mesh resistive network can be written as

$R_{11}I_1 \pm R_{12}I_2 \pm R_{13}I_3 = V_a$ 3.19

$\pm R_{21}I_1+R_{22}I_2 \pm R_{23}I_3= V_b$ 3.20

$\pm R_{31}I_1 \pm R_{32}I_2+R_{33}I_3= V_c$ 3.21

By comparing the equations 3.16, 3.17 and 3.18 with equations 3.19, 3.20 and 3.21 respectively, the following observations can be taken into account.

1. The self-resistance in each mesh
2. The mutual resistances between all pairs of meshes and 3. The algebraic sum of the voltages in each mesh.

The self-resistance of loop 1, $R_{11}=R_1+R_2$, is the sum of the resistances through which I_1 passes.

The mutual resistance of loop 1, $R_{12}= -R_2$, is the sum of the resistances common to loop currents I_1 and I_2. If the directions of the currents passing through the common resistances are the same, the mutual resistance will have a positive sign; and if the directions of the currents passing through the common resistance are opposite then the mutual resistance will have a negative sign.

$V_a=V_1$ is the voltage which drives the loop 1. Here the positive sign is used if the direction of the currents is the same as the direction of the source. If the current direction is opposite to the direction of the source, then the negative sign is used.

Similarly $R_{22}=R_2+R_3$ and $R_{33}=R_4+R_5$ are the self-resistances of loops 2 and 3 respectively. The mutual resistances $R_{13}=0$, $R_{21}= -R_2$, $R_{23}=0$, $R_{31}=0$, $R_{32}=0$ are the sums of the resistances common to the mesh currents indicated in their subscripts.

$V_b= -V_2$, $V_c= V_2$ are the sum of the voltages driving their respective loops.

Example 3.4 write the mesh equation for the circuit shown in fig. 3.8

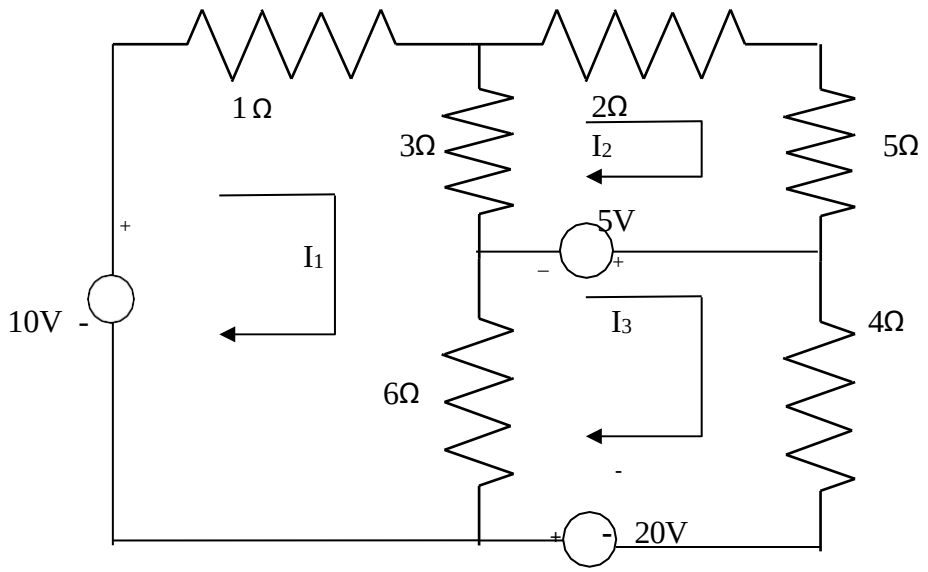

Figure 3.8

Solution : the general equation for three mesh equation are

$R_{11}I_1 \pm R_{12}I_2 \pm R_{13}I_3=V_a$ (3.22)

$\pm R_{21}I_1+R_{22}I_2 \pm R_{23}I_3=V_b$ (3.23)

$\pm R_{31}I_1 \pm R_{32}I_2+R_{33}I_3=V_c$ (3.24)

Consider equation 3.22

R_{11}=self resistance of loop 1=(1Ω+ 3 Ω +6 Ω) =10 Ω

R_{12}= the mutual resistance common to loop 1 and loop 2 = -3 Ω

Here the negative sign indicates that the currents are in opposite direction .

R_{13}= the mutual resistance common to loop 1 & 3= -6 Ω

V_a= +10 V, the voltage the driving the loop 1.

Here he positive sign indicates the loop current I_1 is in the same direction as the source element.

Therefore equation 3.22 can be written as

$10 I_1- 3I_2-6I_3= 10$ V (3.25)

Consider Eq. 3.23

R_{21}= the mutual resistance common to loop 1 and loop 2 = -3 Ω

R_{22}= self resistance of loop 2=(3Ω+ 2 Ω +5 Ω) =10 Ω

R_{23}=0, there is no common resistance between loop 2 and 3.

V_b = -5 V, the voltage driving the loop 2.

Therefore Eq. 3.23 can be written as

$$-3I_1 + 10I_2 = -5V \qquad (3.26)$$

Consider Eq. 3.24

R_{31}= the mutual resistance common to loop 1 and loop 3 = -6 Ω

R_{32}= the mutual resistance common to loop 3 and loop 2 = 0

R_{33}= self resistance of loop 3=(6Ω+ 4 Ω) =10 Ω

V_c= the algebraic sum of the voltage driving loop 3

=(5 V+20V)=25 V (3.27)

Therefore, Eq3.24can be written as $-6I_1 + 10I_3 = 25V$

$-6I_1-3I_2-6I_3= 10V$

$-3I_1+10I_2=-5V$

$-6I_1+10I_3=25V$

3.4 SUPERMESH ANALYSIS

Suppose any of the branches in the network has a current source, then it is slightly difficult to apply mesh analysis straight forward because first we should assume an unknown voltage across the current source, writing mesh equation as before, and then relate the source current to the assigned mesh currents. This is generally a difficult approach. On way to overcome this difficulty is by applying the supermesh technique. Here we have to choose the kind of supermesh. A supermesh is constituted by two adjacent loops that have a common current source. As an example, consider the network shown in the figure 3.9.

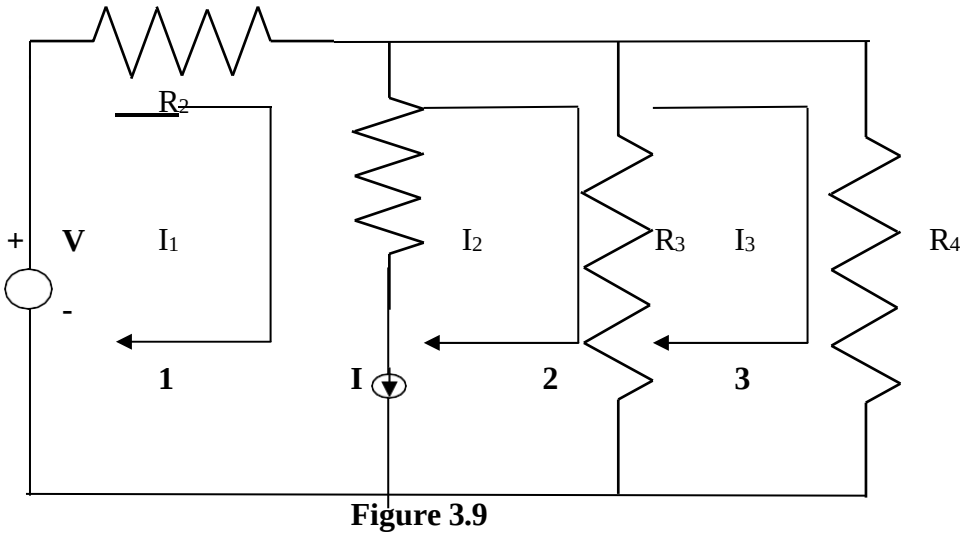

Figure 3.9

Here the current source I is in the common boundary for the two meshes 1 and 2. This current source creates a supermesh, which is nothing but a combination of meshes 1 and 2.

$$R_1I_1 + R_3(I_2-I_3)=V$$

Or $$R_1I_1 + R_3I_2 - R_4I_3= V$$

Considering mesh 3, we have

$$R_3(I_3-I_2)+ R_4I_3=0$$

Finally the current I from current source is equal to the difference between two mesh currents i.e.

$I_1 - I_2 = I$

we have thus formed three mesh equations which we can solve for the three unknown currents in the network.

Example 3.5. Determine the current in the 5Ω resistor in the network given in Fig. 3.10

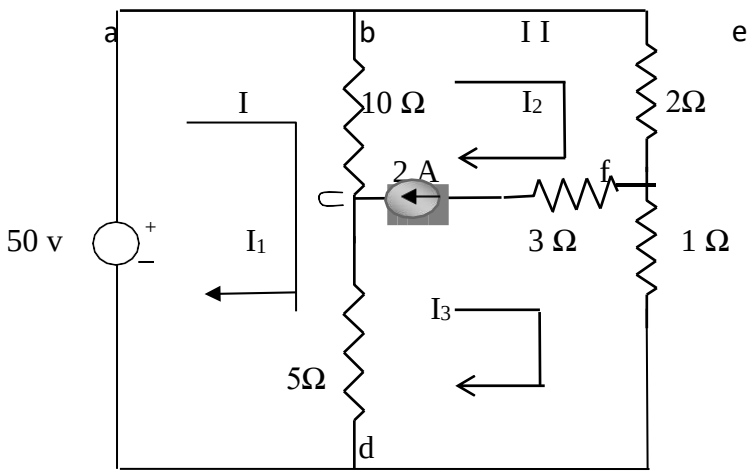

Figure 3.10

Solution: - From the first mesh, i.e. abcda, we have

$$50 = 10(I_1 - I_2) + 5(I_1 - I_3)$$

$$\text{Or } 15I_1 - 10I_2 - 5I_3 = 50 \qquad (3.28)$$

From the second and third meshes. we can form a super mesh

$$10(I_2 - I_1) + 2I_2 + I_3 + 5(I_3 - I_1) = 0$$

$$\text{Or } -15I_1 + 12I_2 + 6I_3 = 0 \qquad (3.29)$$

The current source is equal to the difference between II and III mesh currents

i.e. $I_2 - I_3 = 2A$ (3.30)

Solving 3.28.,3.29 and 3.30. we have

$I_1 = 19.99A, I_2 = 17.33$ A, and $I_3 = 15.33$ A

The current in the 5Ω resistor $= I_1 - I_3$

$= 19.99 - 15.33 = 4.66A$

The current in the 5Ω resistor is 4.66A.

Example 3.6. Write the mesh equations for the circuit shown in fig. 3.11 and determine the currents, I_1, I_2 and I_3.

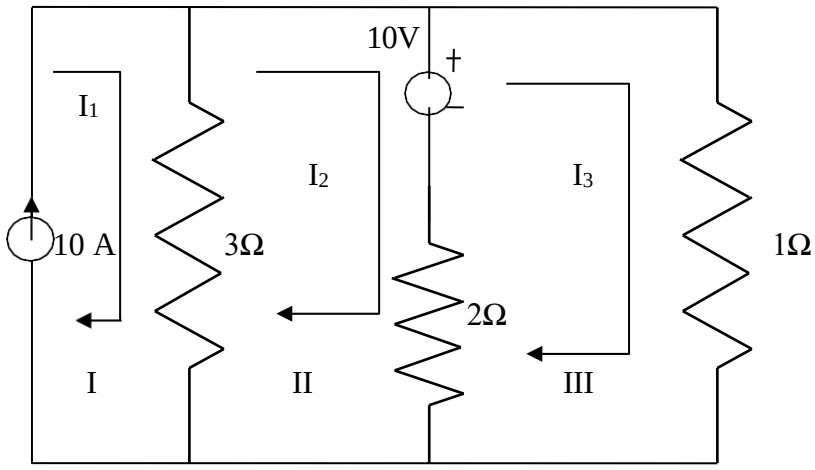

Figure 3.11

Solution ; In fig 3.11, the current source lies on the perimeter of the circuit, and the first mesh is ignored. Kirchhoff's voltage law is applied only for second and third meshes .

From the second mesh, we have

$$3(I_2-I_1)+2(I_2-I_3)+10 =0$$

Or $$-3I_1 +5I_2-2I_3 = -10 \qquad (3.31)$$

From the third mesh, we have

$$I_3 + 2 (I_3 -I_2) =10$$

Or $$-2I_2+3I_3 =10 \qquad (3.32)$$

From the first mesh, $I_1 =10A$ (3.33)

From the abovethree equations, we get

$I_1=10A$, $I_2 =7.27$, $I_3 =8.18A$

3.5 NODALANALYSIS

In the chapter I we discussed simple circuits containing only two nodes, including the reference node. In general, in a N node circuit, one of the nodes is chosen as the reference or datum node, then it is possible to write N -1nodal equations by assuming N-1 node voltages. For example,a10 node circuit requires nine unknown voltages and nine equations. Each node in a circuit can be assigned a number or a letter. The node voltage is the voltage of a given node with respect to one particular node, called the

reference node, which we assume at zero potential. In the circuit shown in fig. 3.12, node 3 is assumed as the Reference node. The voltage at node 1 is the voltage at that node with respect to node 3. Similarly, the voltage at node 2 is the voltage at that node with respect to node 3. Applying Kirchhoff's current law at node 1, the current entering is the current leaving (See Fig.3.13)

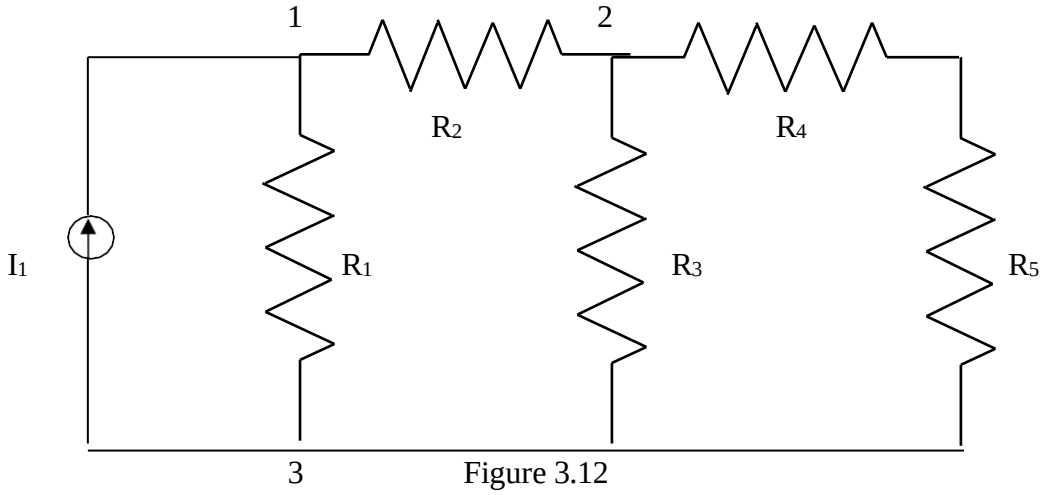

Figure 3.12

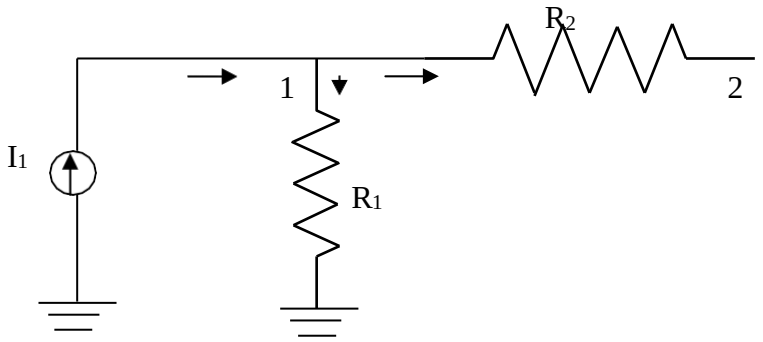

Figure 3.13

$I_1 = V_1/R_1 + (V_1-V_2)/R_2$

Where V_1 and V_2 are the voltages at node 1 and 2, respectively. Similarly, at node 2.the current entering is equal to the current leaving as shown in fig. 3.14

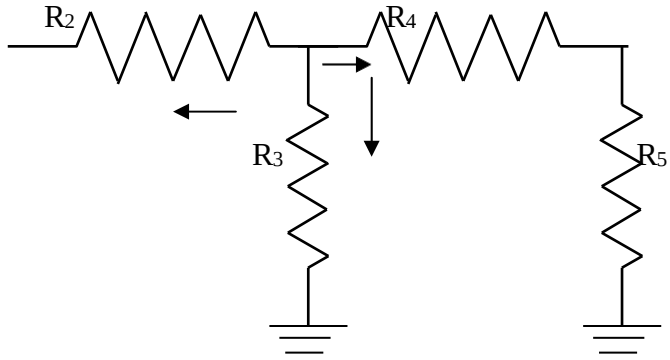

Figure 3.14

$(V_2-V_1)/R_2 + V_2/R_3 + V_2/(R_4+R_5) = 0$

Rearranging the above equations, we have

$V_1[1/R_1+1/R_2]-V_2(1/R_2) = I_1$

$-V_1(1/R_2) + V_2[1/R_2+1/R_3+1/(R_4+R_5)]=0$

From the above equations we can find the voltages at each node.

Example 3.7 Determine the voltages at each node for the circuit shown in fig 3.15

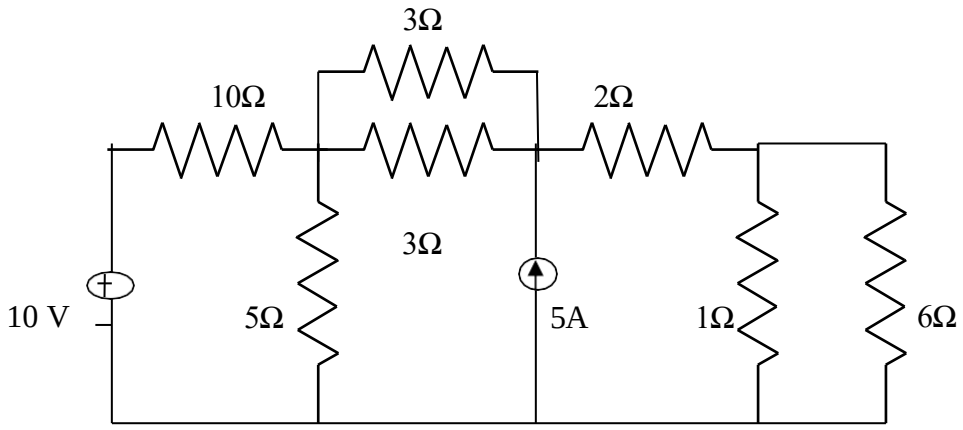

Figure 3.15

Solution : At node 1, assuming that all currents are leaving, we have

$(V_1-10)/10 + (V_1-V_2)/3 + V_1/5 + (V_1-V_2)/3 = 0$

Or $V_1[1/10 + 1/3 + 1/5 + 1/3] - V_2[1/3 + 1/3] = 1$

$0.96V_1 - 0.66V_2 = 1$ (3.36)

At node 2, assuming that all currents are leaving except the current from current source, we have

$(V_2-V_1)/3 + (V_2-V_1)/3 + (V_2-V_3)/2 = 5$

$-V_1[2/3] + V_2[1/3 + 1/3 + 1/2] - V_3(1/2) = 5$

$-0.66V_1 + 1.16V_2 - 0.5V_3 = 5$ (3.37)

At node 3 assuming all currents are leaving, we have

$(V_3-V_2)/2 + V_3/1 + V_3/6 = 0$

$-0.5V_2 + 1.66V_3 = 0$ (3.38)

Applying Cramer's rule we get

$$\begin{bmatrix} 1 & -0.66 & 0 \\ 5 & 1.16 & -0.5 \\ 0 & -0.5 & 1.66 \end{bmatrix} \quad \begin{vmatrix} -0.66 & 1.16 & -0.5 \\ 0 & & \end{vmatrix} \quad 7.154$$

$V_1 = \frac{|\text{Similarly,}}{0.887 =}$ $\frac{0.96 - 0.66\ 0\ |}{8.06} =$

$$\begin{bmatrix} 0.96 & 1 & 0 \\ -0.66 & 5 & -0.5 \\ 0 & 0 & 1.66 \end{bmatrix}$$

$$V_2 = \frac{9.06}{\begin{vmatrix} 0.96 & -0.66 & 0 \end{vmatrix}} = \frac{}{0.887} = 10.2$$

$$\begin{vmatrix} -0.66 & 1.16 & -0.5 \\ 0 & -0.5 & 1.66 \end{vmatrix}$$

$$V^3 = \frac{\begin{vmatrix} 0.96 & -0.66 & 1 \\ -0.66 & 1.16 & 5 \\ 0 & -0.66 & 0 \end{vmatrix}}{\begin{vmatrix} 0.96 & -0.66 & -0.5 \\ 0 & -0.5 & 1.66 \end{vmatrix}} = \frac{2.73}{0.887} = 3.07$$

3.6 NODAL EQUATIONS BY INSPECTION METHOD The nodal equations for a general planar network can also be written by inspection without going through the detailed steps. Consider a three node resistive network, including the reference node, as shown in fig 3.16

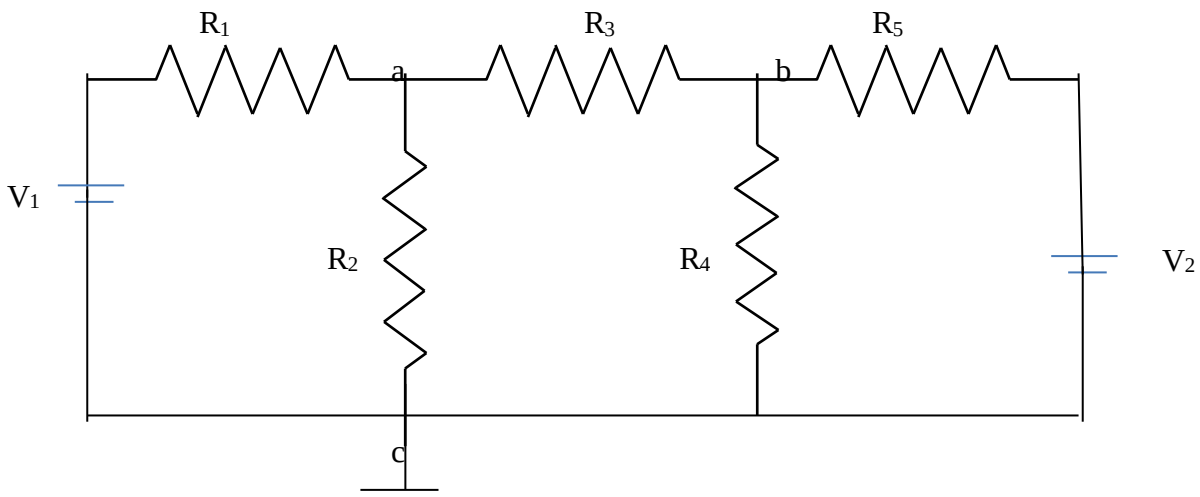

Figure 3.16

In fig. 3.16 the points a and b are the actual nodes and c is the reference node.

Now consider the nodes a and b separately as shown in fig 3.17(a) and (b)

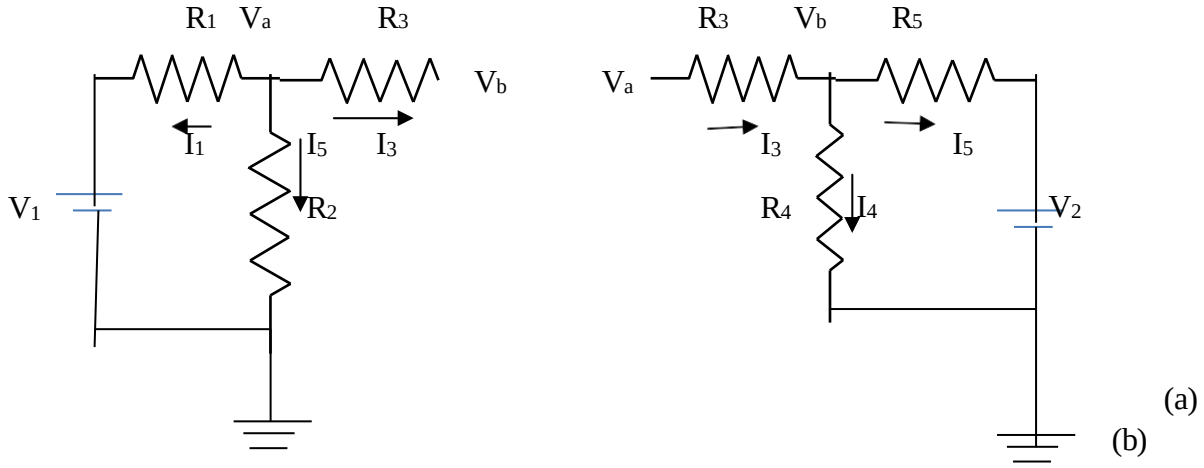

Figure 3.17

In fig 3.17 (a), according to Kirchhoff's current law we have

$I_1+I_2+I_3=0$

$(V_a-V_1)/R_1 + V_a/R_2 + (V_a-V_b)/R_3 = 0$ (3.39)

In fig 3.17 (b) , if we apply Kirchhoff's current law

$I_4 + I_5 = I_3$

$\therefore (V_b-V_a)/R_3 + V_b/R_4 + (V_b-V_2)/R_5 = 0$ (3.40)

Rearranging the above equations we get

$(1/R_1+1/R_2+1/R_3)V_a-(1/R_3)V_b=(1/R_1)V_1$ (3.41)

$(-1/R_3)V_a + (1/R_3+1/R_4+1/R_5)V_b=V_2/R_5$ (3.42)

In general, the above equation can be written as

$G_{aa}V_a + G_{ab}V_b=I_1$ (3.43)

$G_{ba}V_a + G_{bb}V_b=I_2$ (3.44)

By comparing Eqs 3.41,3.42 and Eqs 3.43, 3.44 we have the self conductance at node a, $G_{aa}=(1/R_1 + 1/R_2 + 1/R_3)$ is the sum of the conductances connected to node a. Similarly, $G_{bb}= (1/R_3 + 1/R_4 + 1/R_5)$ is the sum of the conductances connected to node b. $G_{ab}=(-1/R_3)$ is the sum of the mutual conductances connected to node *a* and node *b*. Here all the mutual conductances have negative signs. Similarly, $G_{ba}= (-1/R_3)$ is also a mutual conductance connected between nodes *b* and *a*. I_1 and I_2 are the sum of the source currents at node *a* and node *b*, respectively. The current which drives into the node has positive sign, while the current that drives away from the node has negative sign.

Example 3.8 for the circuit shown in the figure 3.18 write the node equations by the inspection method.

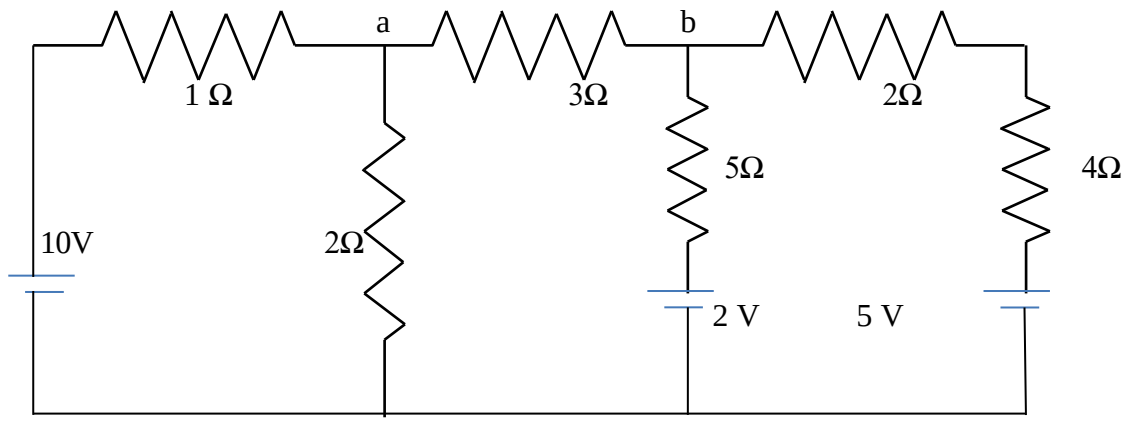

Fig 3.18

Solution:-

The general equations are

$G_{aa}V_a+G_{ab}V_b=I_1$ (3.45)

$G_{ba}V_a + G_{bb}V_b=I_2$ (3.46)

Consider equation 3.45

G_{aa}=(1+ 1/2 +1/3) mho. The self conductance at node *a* is the sum of the conductances connected to node *a*.

G_{bb} = (1/6 + 1/5 + 1/3) mho the self conductance at node *b* is the sum of conductances connected to node *b*.

G_{ab} =-(1/3) mho, the mutual conductances between nodes *a* and *b* is the sum of the conductances connected between node *a* and *b*.

Similarly G_{ba} = -(1/3), the sum of the mutual conductances between nodes *b* and *a*.

I_1=10/1 =10 A, the source current at node *a*,
I_2=(2/5 + 5/6) = 1.23A, the source current at node *b*.

Therefore, the nodal equations are

$1.83V_a-0.33V_b=10$ (3.47)

$-0.33V_a+0.7V_b= 1.23$ (3.48)

3.7 SUPERNODE ANALYSIS

Suppose any of the branches in the network has a voltage source, then it is slightly difficult to apply nodal analysis. One way to overcome this difficulty is to apply the supernode technique. In this method, the two adjacent nodes that are connected by a voltage source are reduced to a single node and then the equations are formed by applying Kirchhoff's current law as usual. This is explained with the help of fig. 3.19

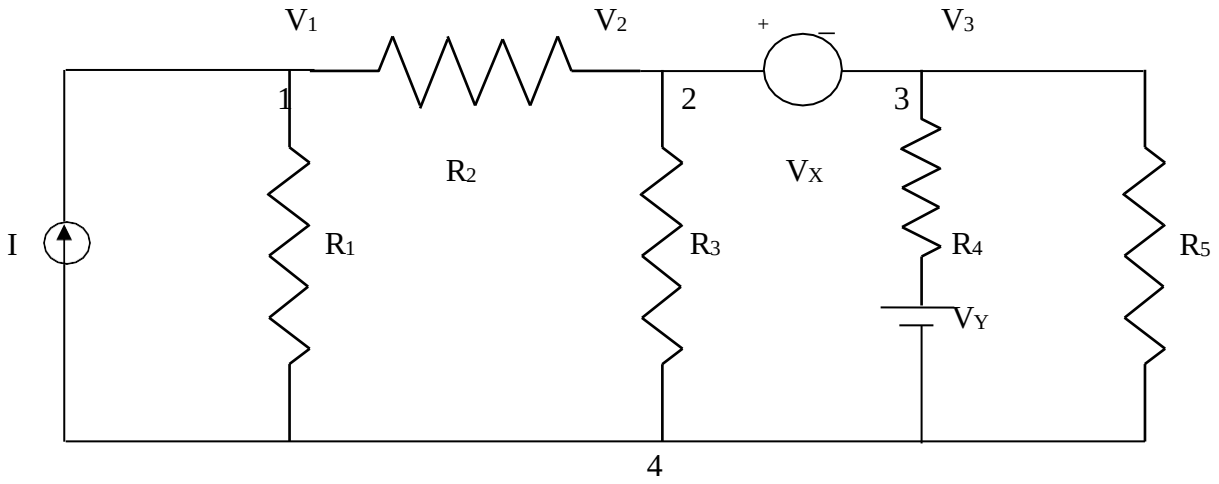

FIG 3.19

It is clear from the fig.3.19, that node 4 is the reference node. Applying Kirchhoff's current law at node 1, we get

$I=(V_1/R_1) + (V_1-V_2)/R_2$

Due to the presence of voltage source V_χ in between nodes 2 and 3 , it is slightly difficult to find out the current. The supernode technique can be conveniently applied in this case.

Accordingly, we can write the combined equation for nodes 2 and 3 as under.
$(V_2-V_1)/R_2 + V_2/R_3 + (V_3-V_y)/R_4 +V_3/R_5= 0$

The other equation is

$V_2-V_3 =V_x$

From the above three equations, we can find the three unknown voltages.

Example 3.9 Determine the current in the 5 Ω resistor for the circuit shown in fig. 3.20

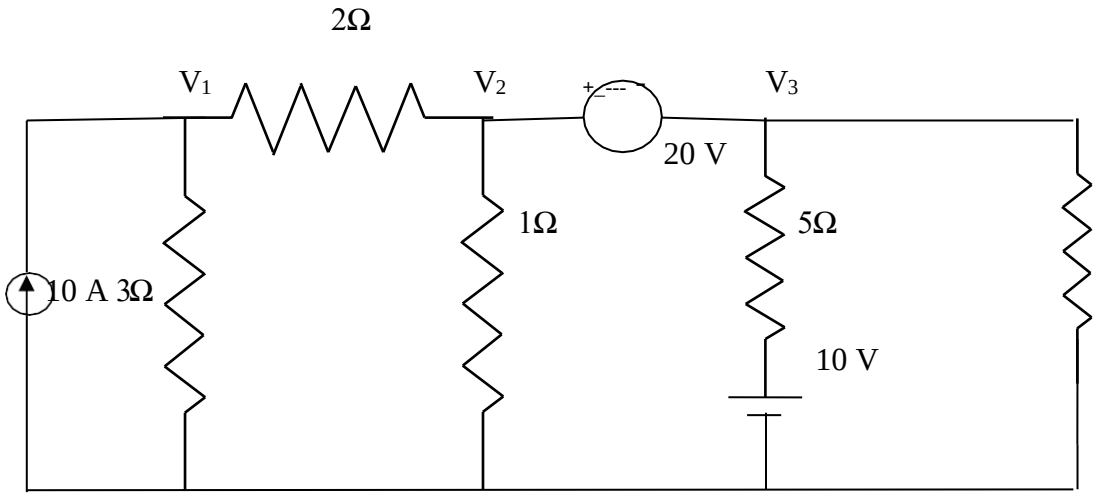

fig. 3.20

Solution. At node 1

$$10= V_1/3 + (V_1-V_2)/2$$

Or $V_1[1/3 +1/2]-(V_2/2)-10=0$

$$0.83V_1-0.5V_2-10 = 0 \qquad (3.49)$$

At node 2 and 3, the supernode equation is

$$(V_2-V_1)/2 + V_2/1 + (V_3-10)/5 +V_3/2 = 0$$

Or $-V_1/2 +V_2[(1/2)+1]+ V_3[1/5 + 1/2]=2$

Or $-0.5V_1+ 1.5V_2+0.7V_3-2=0 \qquad (2.50)$

The voltage between nodes 2 and 3 is given by

$$V_2-V_3=20 \qquad (3.51)$$

Chapter-04

NETWORK THEORM

INTRODUCTION

This chapter introduces a number of theorems that have application throughout the field of electricity and electronics. Not only can they be used to solve networks such as encountered in the previous chapter, but they also provide an opportunity to determine the impact of a particular source or element on the response of the entire system. In most cases, the network to be analyzed and the mathematics required to find the solution are simplified. All of the theorems appear again in the analysis of ac networks. In fact, the application of each theorem to ac networks is very similar in content to that found in this chapter.

The first theorem to be introduced is the superposition theorem, followed by Thévenin's theorem, Norton's theorem, and the maximum power transfer theorem. The chapter concludes with a brief introduction to Millman's theorem and the substitution and reciprocity theorems.

SUPERPOSITION THEOREM

The superposition theorem states that "The current through, or voltage across, any element of a network is equal to the algebraic sum of the currents or voltages produced independently by each source."

In other words, this theorem allows us to find a solution for a current or voltage using only one source at a time. Once we have the solution for each source, we can combine the results to obtain the total solution. The term algebraic appears in the above theorem statement because the currents resulting from the sources of the network can have different directions, just as the resulting voltages can have opposite polarities.

If we are to consider the effects of each source, the other sources obviously must be removed. Setting a voltage source to zero volts is like placing a short circuit across its terminals. Therefore, when removing a voltage source from a network schematic, replace it with a direct connection (short circuit) of zero ohms. Any internal resistance associated with the source must remain in the network.

Setting a current source to zero amperes is like replacing it with an open circuit. Therefore, when removing a current source from a network schematic, replace it by an open circuit of infinite ohms. Any internal resistance associated with the source must remain in the network.

The above statements are illustrated in Fig.

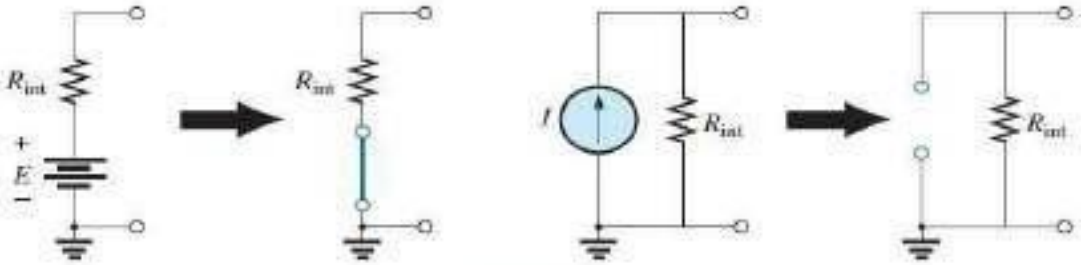

FIG. 9.1

Removing a voltage source and a current source to permit the application of the superposition theorem.

EXAMPLE 9.1

a. Using the superposition theorem, determine the current throughresistor $R2$ for the network in Fig. 9.2.

Solutions:

In order to determine the effect of the 36 V voltage source, the currentsource must be replaced by an open-circuit equivalent as shownin Fig. 9.3. The result is a simple series circuit with a current equal to

$$I_2' = \frac{E}{R_T} = \frac{E}{R_1 + R_2} = \frac{36\text{ V}}{12\ \Omega + 6\ \Omega} = \frac{36\text{ V}}{18\ \Omega} = 2\text{ A}$$

Examining the effect of the 9 A current source requires replacing the 36 V voltage source by a short-circuit equivalent as shown in Fig. 9.4. The result is a parallel combination of resistors $R1$ and 2. Applying the current divider rule results in

$$I_2'' = \frac{R_1(I)}{R_1 + R_2} = \frac{(12\ \Omega)(9\text{ A})}{12\ \Omega + 6\ \Omega} = 6\text{ A}$$

Since the contribution to current $I2$ has the same direction for each source, as shown in Fig. 9.5, the total solution for current $I2$ isthe sum of the currents established by the two sources. That is,

$$I_2 = I_2' + I_2'' = 2\text{ A} + 6\text{ A} = 8\text{ A}$$

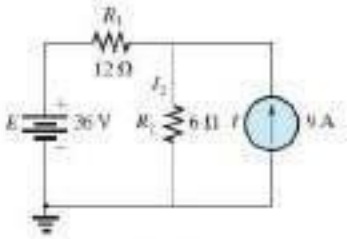

FIG. 9.2
Network to be analyzed in Example 9.1 using the superposition theorem.

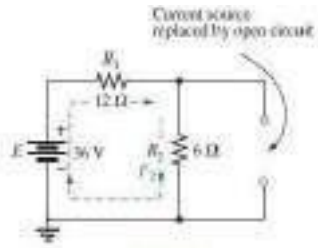

FIG. 9.3
Replacing the 9 A current source in Fig. 9.2 by an open circuit to determine the effect of the 36 V voltage source on current I_2.

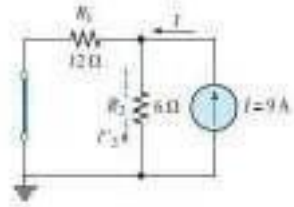

FIG. 9.4
Replacing the 36 V voltage source by a short-circuit equivalent to determine the effect of the 9 A current source on current I_2.

EXAMPLE 9.2 Using the superposition theorem, determine the currentthrough the 12 resistorsin Fig. 9.8. Note that this is a two-source networkof the type examinedin the previous chapter when we appliedbranch-current analysis and mesh analysis.

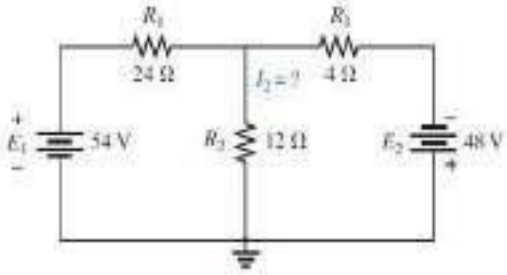

FIG. 9.8
Using the superposition theorem to determine the current through the 12 Ω resistor (Example 9.2).

Solution: Considering the effects of the 54 V source requires replacingthe 48 V source by a short-circuit equivalent as shown in Fig. 9.9.The result is that the 12 and 4 resistors are in parallel.The total resistance seen by the source is therefore,

$$R_T = R_1 + R_2 \| R_3 = 24\ \Omega + 12\ \Omega \| 4\ \Omega = 24\ \Omega + 3\ \Omega = 27\ \Omega$$

and the source current is

$$I_s = \frac{E_1}{R_T} = \frac{54\text{ V}}{27\ \Omega} = 2\text{ A}$$

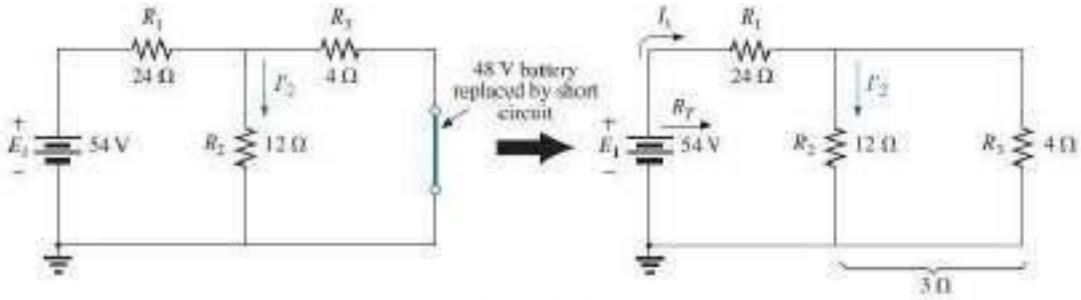

FIG. 9.9
Using the superposition theorem to determine the effect of the 54 V voltage source on current I_2 in Fig. 9.8.

Using the current divider rule results in the contribution to I_2 due to the 54 V source:

$$I'_2 = \frac{R_3 I_s}{R_3 + R_2} = \frac{(4\ \Omega)(2\ \text{A})}{4\ \Omega + 12\ \Omega} = 0.5\ \text{A}$$

If we now replace the 54 V source by a short-circuit equivalent, the network in Fig. 9.10 results. The result is a parallel connection for the 12 Ω and 24 Ω resistors.

Therefore, the total resistance seen by the 48 V source is

$$R_T = R_3 + R_2 \| R_1 = 4\ \Omega + 12\ \Omega \| 24\ \Omega = 4\ \Omega + 8\ \Omega = 12\ \Omega$$

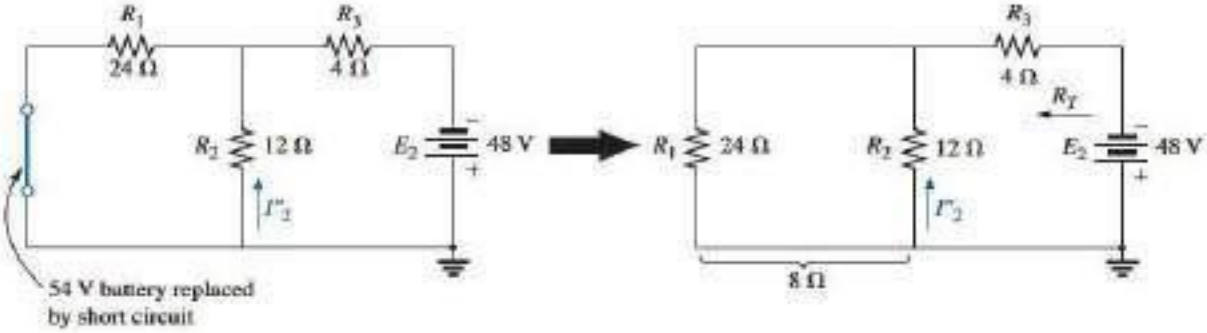

FIG. 9.10
Using the superposition theorem to determine the effect of the 48 V voltage source on current I_2 in Fig. 9.8.

and the source current is

$$I_s = \frac{E_2}{R_T} = \frac{48\ \text{V}}{12\ \Omega} = 4\ \text{A}$$

Applying the current divider rule results in

$$I''_2 = \frac{R_1(I_s)}{R_1 + R_2} = \frac{(24\ \Omega)(4\ \text{A})}{24\ \Omega + 12\ \Omega} = 2.67\ \text{A}$$

It is now important to realize that current I_2 due to each source has a different direction, as shown in Fig. 9.11. The net current therefore is the difference of the two and in the direction of the larger as follows:

$$I_2 = I''_2 - I'_2 = 2.67\ \text{A} - 0.5\ \text{A} = \mathbf{2.17\ A}$$

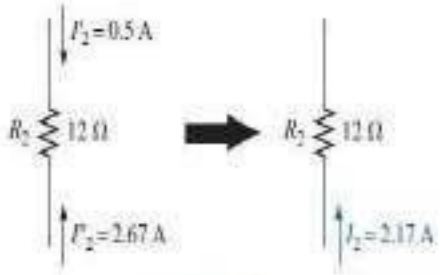

FIG. 9.11
Using the results of Figs. 9.9 and 9.10 to determine current I_2 for the network in Fig. 9.8.

EXAMPLE 9.3 Using the superposition theorem, determine current $I1$ for the network in

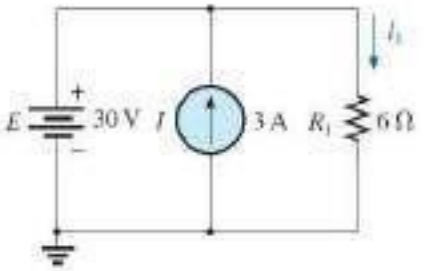

FIG. 9.12
Two-source network to be analyzed using the superposition theorem in Example 9.3.

Solution: Since two sources are present, there are two networks to beanalyzed. First let us determine the effects of the voltage source by settingthe current source to zero amperes as shown in Fig. 9.13. Note thatthe resulting current is defined as I_1' because it is the current throughresistor $R1$ due to the voltage source only.

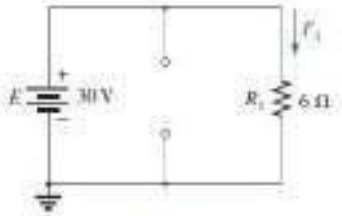

FIG. 9.13
Determining the effect of the 30 V supply on the current I_1 in Fig. 9.12.

Due to the open circuit, resistor $R1$ is in series (and, in fact, in parallel)with the voltage source E. The voltage across the resistor is the appliedvoltage, and current I_1' is determined by

$$I_1' = \frac{V_1}{R_1} = \frac{E}{R_1} = \frac{30\text{ V}}{6\ \Omega} = 5\text{ A}$$

Now for the contribution due to the currentsource. Setting the voltagesource to zero volts results in the network in Fig. 9.14, this presents us with an interesting situation.The current source has been replaced witha short-circuit equivalent that is directly across the current source andresistor $R1$. Since the source current takes the path of least resistance, it chooses the zero ohm path of the inserted short-circuit equivalent, andthe current through $R1$ is zero amperes. This is clearly demonstrated by an application of the current divider rule as follows:

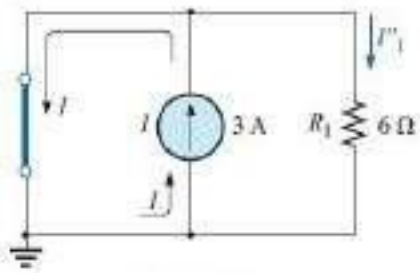

FIG. 9.14
Determining the effect of the 3 A current source on the current I_1 in Fig. 9.12.

$$I_1'' = \frac{R_{sc}I}{R_{sc} + R_1} = \frac{(0\ \Omega)I}{0\ \Omega + 6\ \Omega} = 0\text{ A}$$

Since I_1' and I_1'' have the same defined direction in Figs. 9.13 and 9.14, the total current is defined by

$$I_1 = I_1' + I_1'' = 5\text{ A} + 0\text{ A} = \mathbf{5\ A}$$

Although this has been an excellent introduction to the application of the superposition theorem, it should be immediately clear in Fig. 9.12 that the voltage source is in parallel with the current source and load resistor R_1, so the voltage across each must be 30 V. The result is that I_1 must be determined solely by

$$I_1 = \frac{V_1}{R_1} = \frac{E}{R_1} = \frac{30\text{ V}}{6\ \Omega} = 5\text{ A}$$

EXAMPLE 9.4 Using the principle of superposition, find the current I_2 through the 12 kΩ resistor in Fig. 9.15.

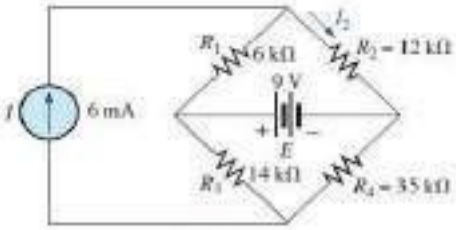

FIG. 9.15
Example 9.4.

Solution: Consider the effect of the 6 mA current source (Fig. 9.16).

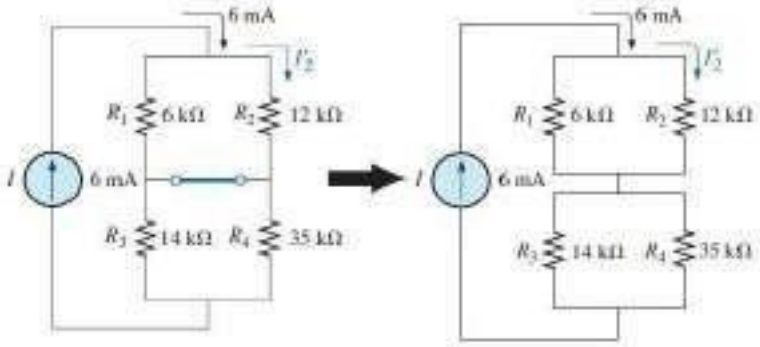

FIG. 9.16
The effect of the current source I on the current I_2.

The current divider rule gives

$$I_2' = \frac{R_3 I}{R_1 + R_2} = \frac{(6\text{ k}\Omega)(6\text{ mA})}{6\text{ k}\Omega + 12\text{ k}\Omega} = 2\text{ mA}$$

Considering the effect of the 9 V voltage source (Fig. 9.17) gives

$$I_2'' = \frac{E}{R_1 + R_2} = \frac{9\text{ V}}{6\text{ k}\Omega + 12\text{ k}\Omega} = 0.5\text{ mA}$$

Since I_2' and I_2'' have the same direction through R_2, the desired current is the sum of the two:

$$\begin{aligned} I_2 &= I_2' + I_2'' \\ &= 2\text{ mA} + 0.5\text{ mA} \\ &= \mathbf{2.5\ mA} \end{aligned}$$

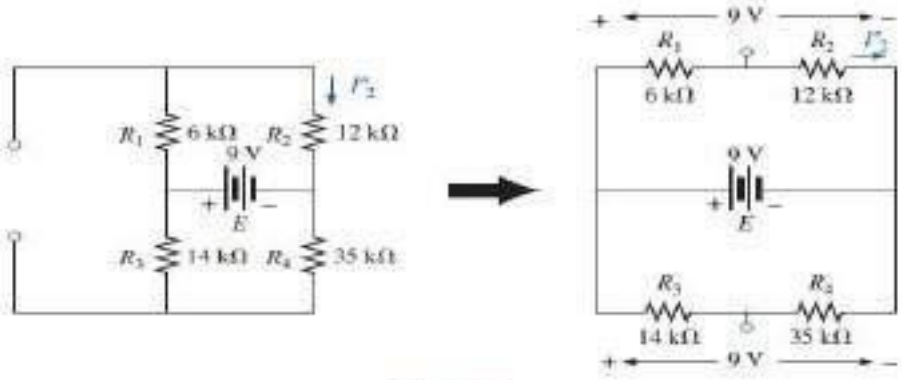

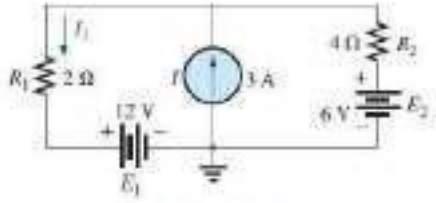

FIG. 9.18
Example 9.5.

EXAMPLE 9.5 Find the current through the 2 Ω resistor of the network in Fig. 9.18. The presence of three sources results in three different networks to be analyzed.

Solution: Consider the effect of the 12 V source (Fig. 9.19):

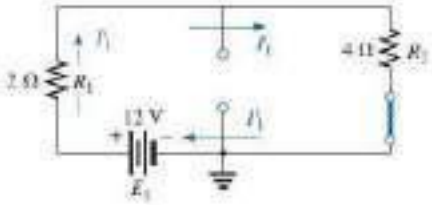

FIG. 9.19
The effect of E_1 on the current I.

9.3 THÉVENIN'S THEOREM

The next theorem to be introduced, **Thévenin's theorem,** is probably one of the most interesting in that it permits the reduction of complex networks to a simpler form for analysis and design.

In general, the theorem can be used to do the following:

- ***Analyze networks with sources that are not in series or parallel.***
- ***Reduce the number of components required to establish the same characteristics at the output terminals.***
- ***Investigate the effect of changing a particular component on the behaviour of a network without having to analyze the entire network after each change.***

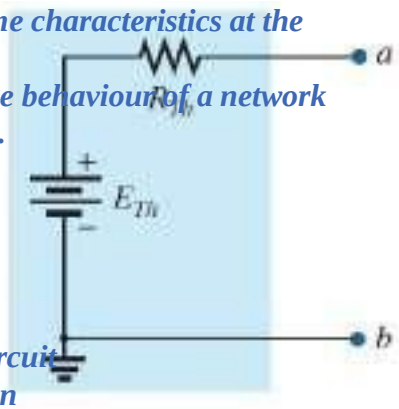

FIG. 9.23
Thévenin equivalent circuit.

All three areas of application are demonstrated in the examples to follow.

Thévenin's theorem states the following:

Any two-terminal dc network can be replaced by an equivalent circuit consisting solely of a voltage source and a series resistor as shown in Fig. 9.23.

The theorem was developed by Commandant Leon-Charles Thévenin in 1883 as described in Fig. 9.24.

FIG. 9.24
Leon-Charles Thévenin.
Courtesy of the Bibliothèque École Polytechnique, Paris, France.

To demonstrate the power of the theorem, consider the fairly complex network of Fig. 9.25(a) with its two sources and series-parallel connections.

The theorem states that the entire network inside the blue shaded area can be replaced by one voltage source and one resistor as shown in Fig. 9.25(b). If the replacement is done properly, the voltage across, and the current through, the resistor *RL* will be the same for each network. The value of *RL* can be changed to any

value, and the voltage,current, orpower to the load resistor is the same for each configuration.
Now, this is a very powerful statement—one that is verified in the examplesto follow.
The question then is, How can you determine the proper value ofThévenin voltage and resistance? In general, finding the Thévenin *resistance* value is quite straightforward. Finding the Thévenin *voltage* can bemore of a challenge and, in fact, may require using the superpositiontheorem.
Fortunately, there is a series of steps that will lead to the proper valueof each parameter. Although a few of the steps may seem trivial at first,they can become quite important when the network becomes complex.

Thévenin's Theorem Procedure

Preliminary:

1. Remove that portion of the network where the Thévenin equivalentcircuit is found. In Fig. 9.25(a), this requires that the load resistorRL be temporarily removed from the network.

2. Mark the terminals of the remaining two-terminal network.(The importance of this step will become obvious as we progress through some complex networks.)RTh :

3. Calculate RTh by first setting all sources to zero (voltage sourcesare replaced by short circuits and current sources by open circuits)and then finding the resultant resistance between the two markedterminals. (If the internal resistance of the voltage and/or current sources is included in the original network, it must remain whenthe sources are set to zero.)ETh :

4. Calculate ETh by first returning all sources to their original positionand finding the open-circuit voltage between the marked terminals.(This step is invariably the one that causes most confusionand errors. In all cases, keep in mind that it is the open-circuit potential between the two terminals marked in step 2.) Conclusion:

5. Draw the Thévenin equivalentcircuit with the portion of thecircuitpreviously removed replaced between the terminals of theequivalent circuit. This step is indicated by the placement of theresistor RL between the terminals of the Thévenin equivalentcircuitas shown in Fig. 9.25(b).

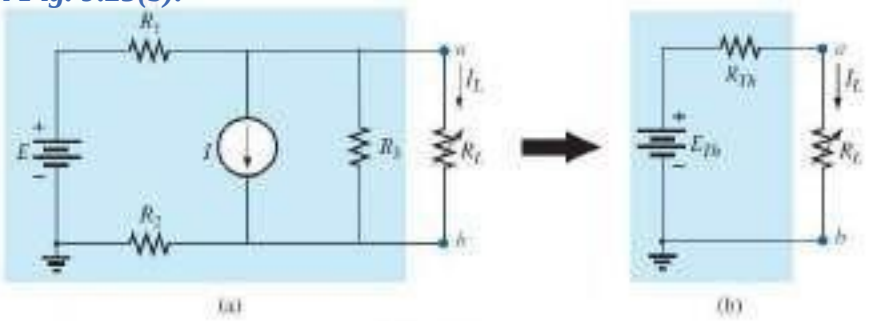

FIG. 9.25
Substituting the Thévenin equivalent circuit for a complex network.

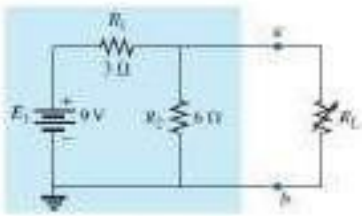

FIG. 9.26
Example 9.6

EXAMPLE 9.6 Find the Thévenin equivalent circuit for the network in the shaded area of the network in Fig. 9.26. Then find the current through R_L for values of 2 Ω, 10 Ω, and 100 Ω.

Solution:

Steps 1 and 2: These produce the network in Fig. 9.27. Note that the load resistor R_L has been removed and the two "holding" terminals have been defined as a and b.

Step 3: Replacing the voltage source E_1 with a short-circuit equivalent yields the network in Fig. 9.28(a), where

$$R_{Th} = R_1 \| R_2 = \frac{(3\ \Omega)(6\ \Omega)}{3\ \Omega + 6\ \Omega} = \mathbf{2\ \Omega}$$

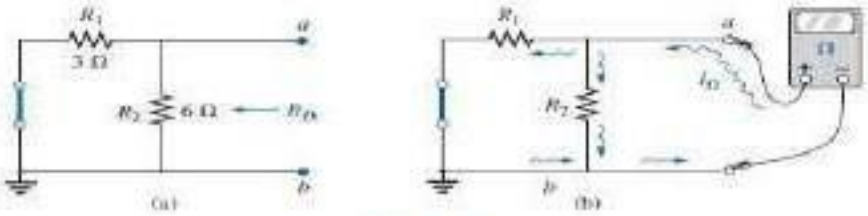

FIG. 9.28
Determining R_{Th} for the network in Fig. 9.27.

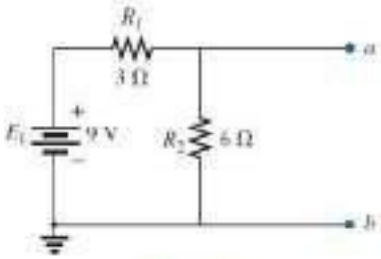

FIG. 9.27
Identifying the terminals of particular importance when applying Thévenin's theorem.

The importance of the two marked terminals now begins to surface. They are the two terminals across which the Thévenin resistance is measured. It is no longer the total resistance as seen by the source, as determined in the majority of problems of Chapter 7. If some difficulty develops when determining R_{Th} with regard to whether the resistive elements are in series or parallel, consider recalling that the ohmmeter sends out a trickle current into a resistive combination and senses the level of the resulting voltage to establish the measured resistance level. In Fig. 9.28(b), the trickle current of the ohmmeter approaches the network through terminal *a*, and when it reaches the junction of *R*1 and *R*2,it splits as shown. The fact that the trickle current splits and then recombines at the lower node reveals that the resistors are in parallel as far as the ohmmeter reading is concerned. In essence, the path of the sensing current of the ohmmeter has revealed how the resistors are connected tothe two terminals of interest and how the Thévenin resistance should bedetermined. Remember this as you work through the various examplesin this section.

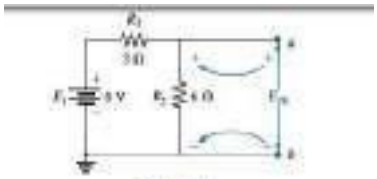

FIG. 9.29
Determining E_{Th} for the network in Fig. 9.27.

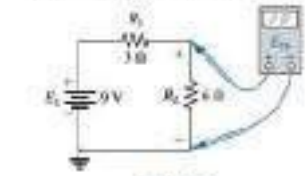

FIG. 9.30
Measuring E_{Th} for the network in Fig. 9.27.

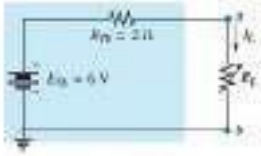

FIG. 9.31
Substituting the Thévenin equivalent circuit for the network external to R_L in Fig. 9.26.

Step 4: Replace the voltage source (Fig. 9.29). For this case, the opencircuitvoltage *ETh* is the same as the voltage drop across the 6 resistor.

Applying the voltage divider rule gives

$$E_{Th} = \frac{R_2 E_1}{R_2 + R_1} = \frac{(6\ \Omega)(9\ \text{V})}{6\ \Omega + 3\ \Omega} = \frac{54\ \text{V}}{9} = \mathbf{6\ V}$$

It is particularly important to recognize that E_{Th} is the open-circuit potential between points a and b. Remember that an open circuit can have any voltage across it, but the current must be zero. In fact, the current through any element in series with the open circuit must be zero also. The use of a voltmeter to measure E_{Th} appears in Fig. 9.30. Note that it is placed directly across the resistor R_2 since E_{Th} and V_{R_2} are in parallel.

Step 5: (Fig. 9.31):

$$I_L = \frac{E_{Th}}{R_{Th} + R_L}$$

$$R_L = 2\ \Omega: \qquad I_L = \frac{6\ \text{V}}{2\ \Omega + 2\ \Omega} = \mathbf{1.5\ A}$$

$$R_L = 10\ \Omega: \qquad I_L = \frac{6\ \text{V}}{2\ \Omega + 10\ \Omega} = \mathbf{0.5\ A}$$

$$R_L = 100\ \Omega: \qquad I_L = \frac{6\ \text{V}}{2\ \Omega + 100\ \Omega} = \mathbf{0.06\ A}$$

If Thévenin's theorem were unavailable, each change in R_L would require that the entire network in Fig. 9.26 be reexamined to find the new value of R_L.

EXAMPLE 9.7 Find the Thévenin equivalent circuit for the network in the shaded area of the network in Fig. 9.32.

Solution:

Steps 1 and 2: See Fig. 9.33.

Step 3: See Fig. 9.34. The current source has been replaced with anopen-circuit equivalent and the resistance determined between terminals *a* and *b*.

In this case, an ohmmeter connected between terminals *a* and *b* sendsout a sensing current that flows directly through *R*1 and *R*2 (at the samelevel). The result is that *R*1 and *R*2 are in series and the Thévenin resistanceis the sum of the two,

$$R_{Th} = R_1 + R_2 = 4\ \Omega + 2\ \Omega = \mathbf{6\ \Omega}$$

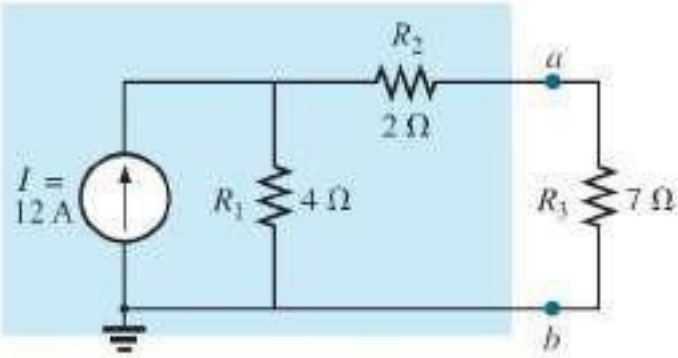

FIG. 9.32
Example 9.7.

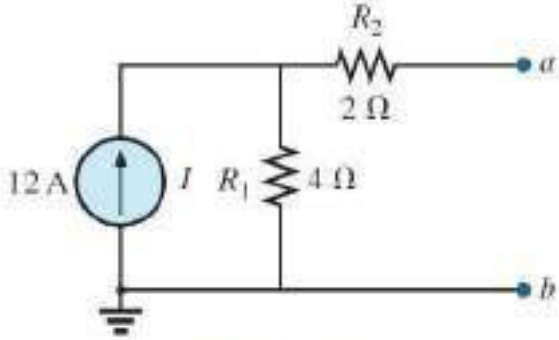

FIG. 9.33
Establishing the terminals of particular interest for the network in Fig. 9.32.

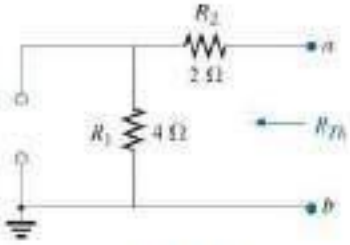

FIG. 9.34
Determining R_{Th} for the network in Fig. 9.33.

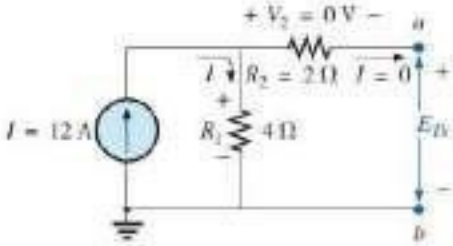

FIG. 9.35
Determining E_{Th} for the network in Fig. 9.33.

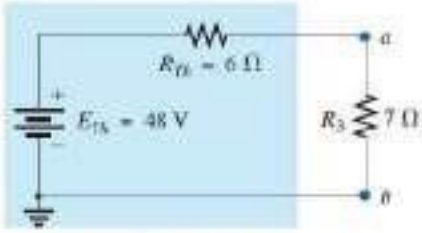

FIG. 9.36
Substituting the Thévenin equivalent circuit in the network external to the resistor R_3 in Fig. 9.32.

Step 4: See Fig. 9.35. In this case, since an open circuit exists betweenthe two marked terminals, the current is zero between these terminals resistor. The voltage drop across *R*2 is, therefore,

$$V2 = I2R2 = (0)\ R2 = 0\ \text{V}$$

and $$ETh = V1 = I1R1 = IR1 = (12\ \text{A})(4\ \_) = \mathbf{48\ V}$$

Step 5: See Fig. 9.36.

EXAMPLE 9.8 Find the Thévenin equivalent circuit for the network in the shaded area of the network in Fig. 9.37. Note in this example thatthere is no need for the section of the network to be preserved to be at the"end" of the configuration.

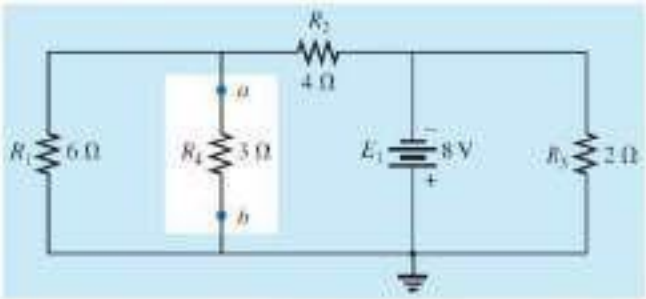

FIG. 9.37

Solution:

Steps 1 and2: See Fig. 9.38

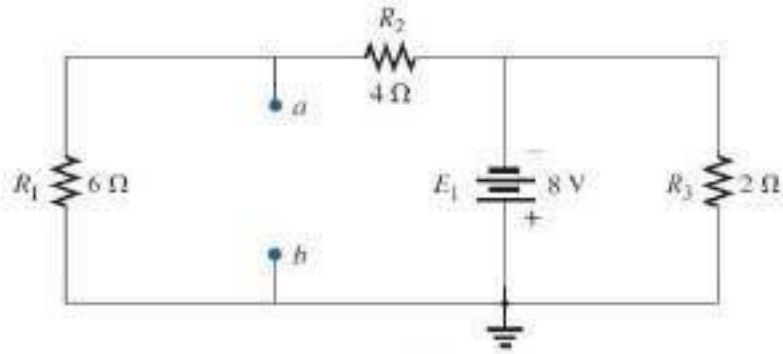

FIG. 9.38

Identifying the terminals of particular interest for the network in Fig. 9.37.

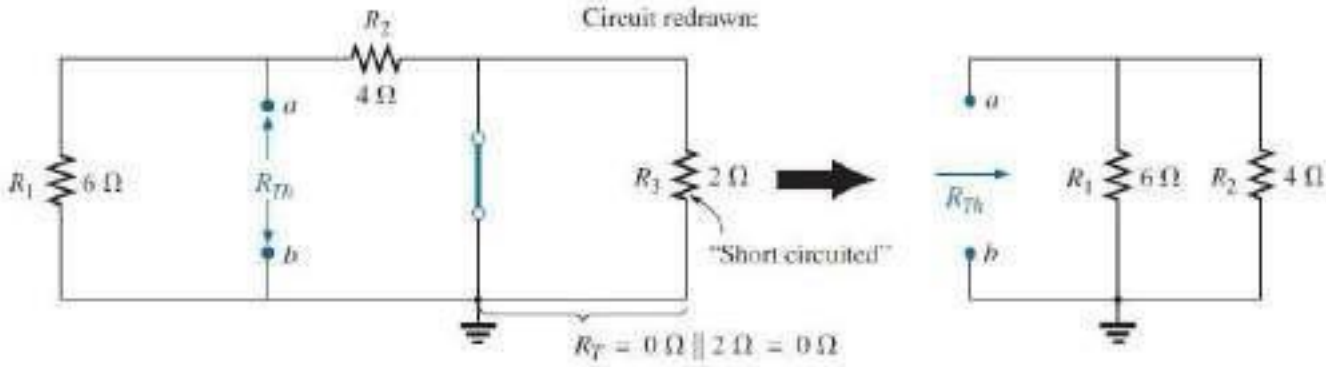

FIG. 9.39

Determining R_{Th} for the network in Fig. 9.38.

Step 3: See Fig. 9.39. Steps 1 and 2 are relatively easy to apply, but nowwe must be careful to "hold" onto the terminals *a* and *b* as the Théveninresistance and voltage are determined. In Fig. 9.39, all the remainingelements turn out to be in parallel, and the network can be redrawn asshown. We have

$$R_{Th} = R_1 \| R_2 = \frac{(6\ \Omega)(4\ \Omega)}{6\ \Omega + 4\ \Omega} = \frac{24\ \Omega}{10} = \mathbf{2.4\ \Omega}$$

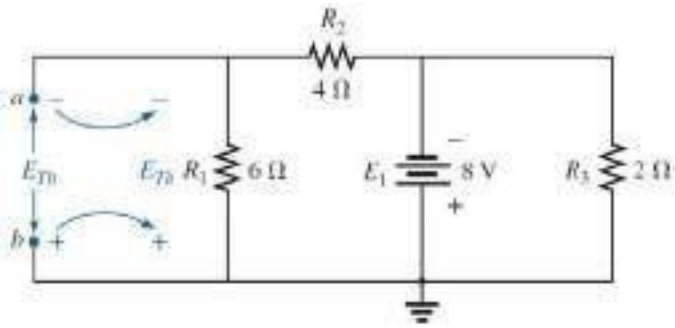

FIG. 9.40

Determining E_{Th} for the network in Fig. 9.38.

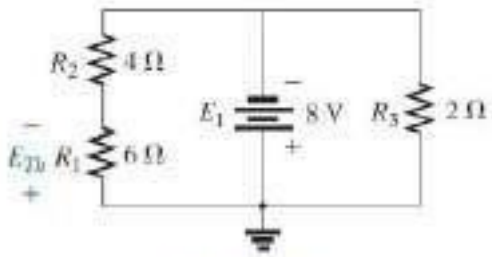

FIG. 9.41

Network of Fig. 9.40 redrawn.

Step 4: See Fig. 9.40. In this case, the network can be redrawn as shownin Fig. 9.41. Since the voltage is the same across parallel elements, thevoltage across the series resistors *R*1 and *R*2 is *E*1, or 8 V. Applying thevoltage divider rule gives

$$E_{Th} = \frac{R_1 E_1}{R_1 + R_2} = \frac{(6\ \Omega)(8\ \text{V})}{6\ \Omega + 4\ \Omega} = \frac{48\ \text{V}}{10} = \mathbf{4.8\ V}$$

Step 5: See Fig. 9.42.

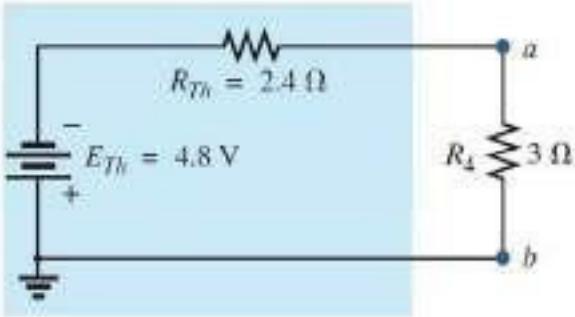

FIG. 9.42
Substituting the Thévenin equivalent circuit for the network external to the resistor R_4 in Fig. 9.37.

EXAMPLE 9.9 Find the Thévenin equivalent circuit for the network inthe shaded area of the bridge network in Fig. 9.43.

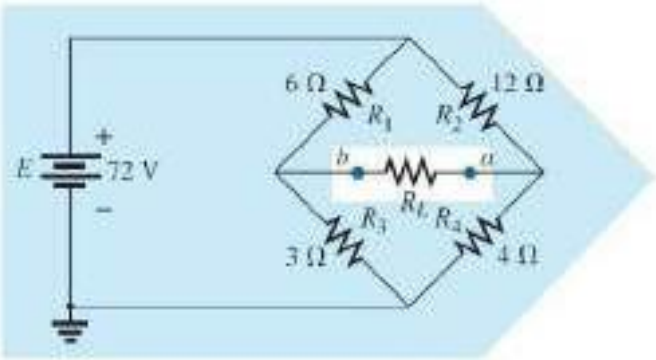

FIG. 9.43
Example 9.9.

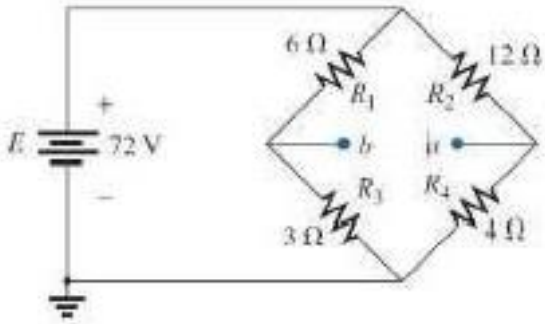

FIG. 9.44
Identifying the terminals of particular interest for the network in Fig. 9.43.

Solution:

Steps 1 and 2: See Fig. 9.44.

Step 3: See Fig. 9.45. In this case, the short-circuit replacement of the voltagesource *E* provides a direct connection between *c* and *c_* in Fig. 9.45(a),permitting a "folding" of the network around the horizontal line of *a-b* toproduce the configuration in Fig. 9.45(b).

$$R_{Th} = R_{a-b} = R_1 \| R_3 + R_2 \| R_4$$
$$= 6\,\Omega \| 3\,\Omega + 4\,\Omega \| 12\,\Omega$$
$$= 2\,\Omega + 3\,\Omega = \mathbf{5\,\Omega}$$

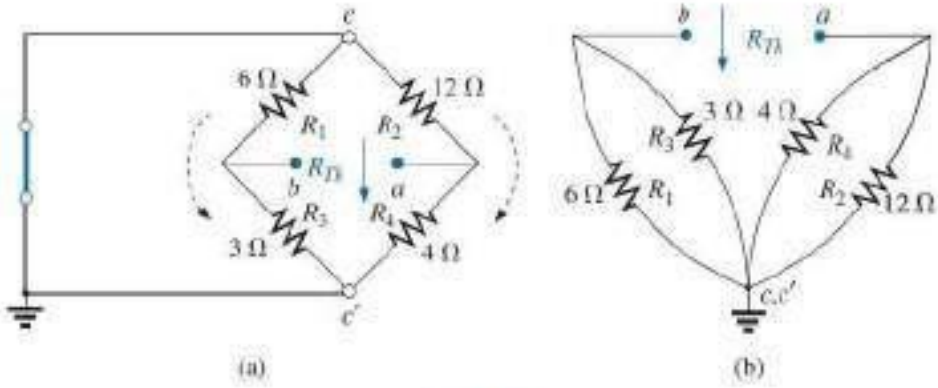

FIG. 9.45
Solving for R_{Th} for the network in Fig. 9.44.

Step 4: The circuit is redrawn in Fig. 9.46. The absence of a direct connection between *a* and *b* results in a network with three parallel branches. The voltages V_1 and V_2 can therefore be determined using the voltage divider rule:

$$V_1 = \frac{R_1 E}{R_1 + R_3} = \frac{(6\ \Omega)(72\ \text{V})}{6\ \Omega + 3\ \Omega} = \frac{432\ \text{V}}{9} = 48\ \text{V}$$

$$V_2 = \frac{R_2 E}{R_2 + R_4} = \frac{(12\ \Omega)(72\ \text{V})}{12\ \Omega + 4\ \Omega} = \frac{864\ \text{V}}{16} = 54\ \text{V}$$

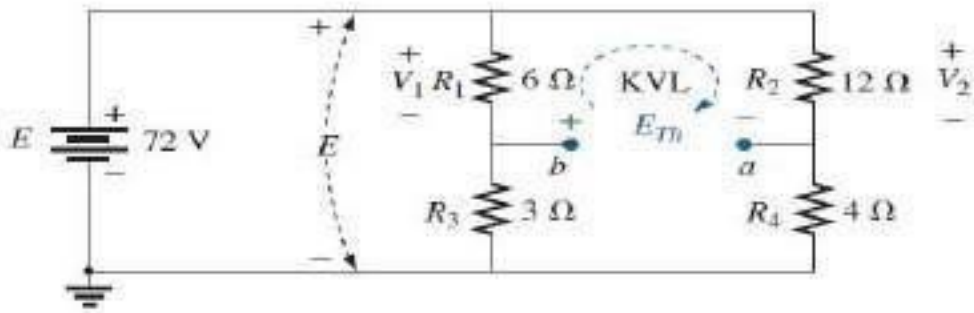

FIG. 9.46
Determining E_{Th} for the network in Fig. 9.44.

Assuming the polarity shown for E_{Th} and applying Kirchhoff's voltage law to the top loop in the clockwise direction results in

$$\Sigma_C V = +E_{Th} + V_1 - V_2 = 0$$

and $$E_{Th} = V_2 - V_1 = 54\ \text{V} - 48\ \text{V} = \mathbf{6\ V}$$

Step 5: See Fig. 9.47.

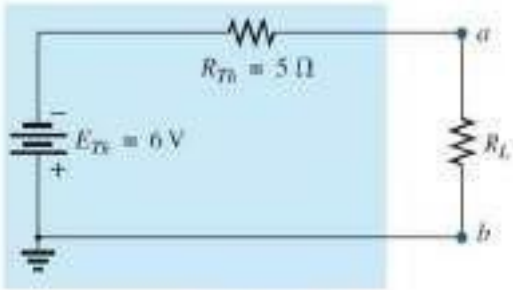

FIG. 9.47

EXAMPLE 9.11 For the network of Fig. 9.54,
a. Find the Thévenin equivalent circuit for the portion of the networkin the shaded area.
b. Reconstruct the network of Fig. 9.54 with the Thévenin equivalentnetwork in place.
c. Using the resulting network of part (b) find the voltage *Va*.

Solutions:

a. *Steps 1 and 2:* See Fig. 9.55.
Step 3: See Fig. 9.56.

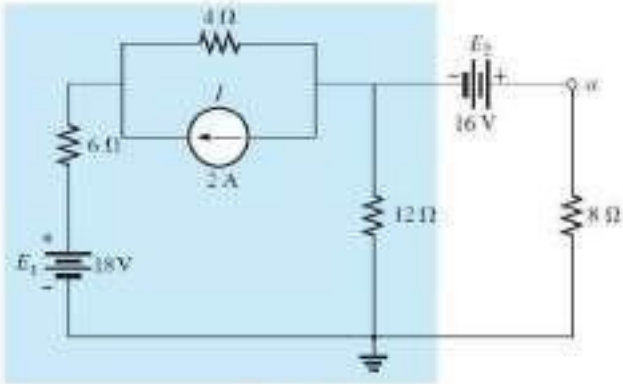

FIG. 9.54
Example 9.11.

$$R_{Th} = 12\ \Omega \| (4\ \Omega + 6\ \Omega) = 12\ \Omega \| 10\ \Omega = 5$$

Step 4: Applying the superposition theorem, we will first find the effect of the voltage source on the Thévenin voltage using the network of Fig. 9.57. Applying the voltage divider rule:

$$E'_{Th} = \frac{12\ \Omega\ (18\ \text{V})}{6\ \Omega + 4\ \Omega + 12\ \Omega} = \frac{216}{22}\text{V} = 9.82\ \text{V}$$

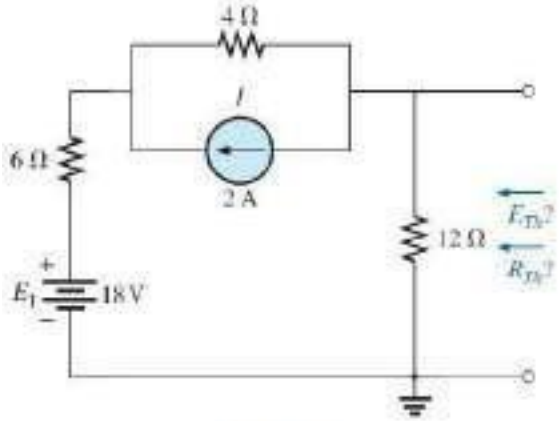

FIG. 9.55
Establishing the terminals of interest for the network of Fig. 9.54.

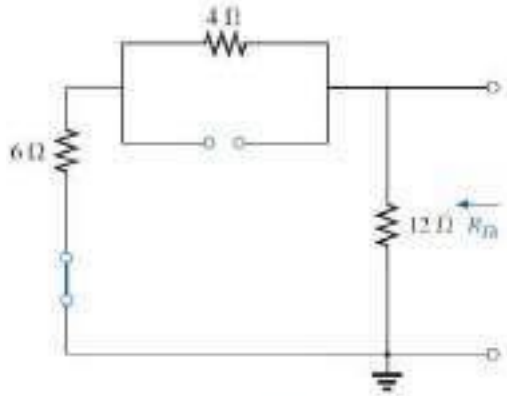

FIG. 9.56
Determining R_{Th}.

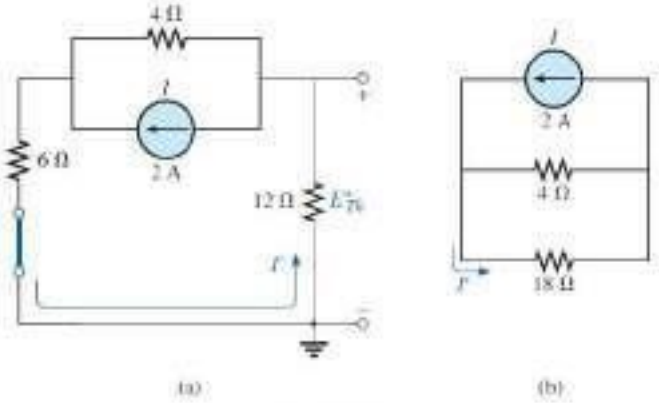

FIG. 9.58
Determining the contribution of I to E_{Th}.

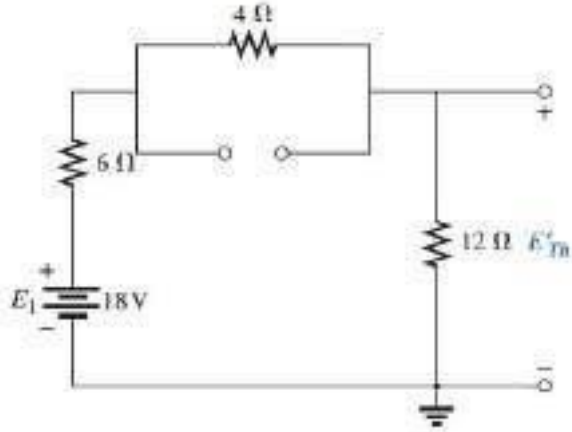

FIG. 9.57
Determining the contribution of E_1 to E_{Th}.

The contribution due to the current source is determined using the network of Fig. 9.58(a) redrawn as shown in Fig. 9.58(b). Applying the current divider rule:

$$I' = \frac{4\,\Omega\,(2\text{ A})}{4\,\Omega + 18\,\Omega} = \frac{8}{22}\text{ A} = 0.364\text{ A}$$

and $\quad E'_{Th} = -I'(12\,\Omega) = -(0.364\text{ A})(12\,\Omega) = -4.37\text{ V}$

so that $\quad E_{Th} = E'_{Th} + E''_{Th} = 9.82\text{ V} - 4.37\text{ V} = \mathbf{5.45\ V}$

b. The reconstructed network is shown in Fig. 9.59.

c. Using the voltage divider rule:

$$V_a = \frac{8\,\Omega\,(5.45\text{ V} + 16\text{ V})}{5.45\,\Omega + 8\,\Omega} = \frac{8\,(21.45)}{13.45}\text{ V} = \frac{171.6}{13.45}\text{ V} = \mathbf{12.76\ V}$$

Instead of using the superposition theorem, the current source could first have been converted to a voltage source and the series elements combined to determine the Thévenin voltage. In any event both approaches would have yielded the same results.

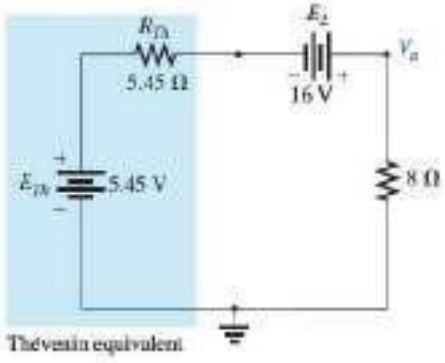

FIG. 9.59
Applying the Thévenin equivalent network to the network of Fig. 9.54.

9.4 NORTON'S THEOREM

Any two-terminal linear bilateral dc network can be replaced by an equivalentcircuit consisting of a current source and a parallel resistor, as shown in Fig. 9.65.

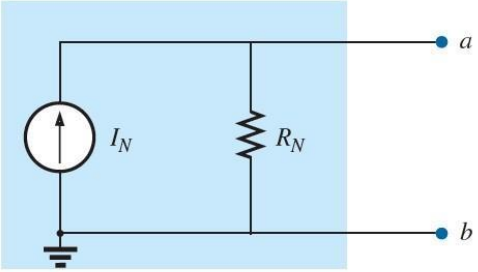

FIG. 9.65
Norton equivalent circuit.

FIG. 9.64
Edward L. Norton.
Reprinted with the permission of Lucent Technologies, Inc./Bell Labs.

The discussion of Thévenin's theorem with respect to the equivalentcircuit can also be applied to the Norton equivalent circuit. The stepsleading to the proper values of *IN* and *RN* are now listed.

Norton's Theorem Procedure

Preliminary:

1. Remove that portion of the network across which the Nortonequivalent circuit is found.

2. Mark the terminals of the remaining two-terminal network.

RN:

3. Calculate RN by first setting all sources to zero (voltage sources are replaced with short circuits and current sources with opencircuits) and then finding the resultant resistance between the twomarked terminals. (If the internal resistance of the voltage and/orcurrent sources is included in the original network, it must remainwhen the sources are set to zero.) Since RN _ RTh, the procedureand value obtained using the approach described for Thévenin'stheorem will determine the proper value of RN.

IN:

4. Calculate IN by first returning all sources to their original positionand then finding the short-circuit current between the markedterminals. It is the same current that would be measured by anammeter placed between the marked terminals.

Conclusion:

5. Draw the Norton equivalent circuit with the portion of the circuitpreviously removed replaced between the terminals of the equivalentcircuit.

The Norton and Thévenin equivalent circuits can also be found fromeach other by using the source transformation discussed earlier in thischapter and reproduced in Fig. 9.66.

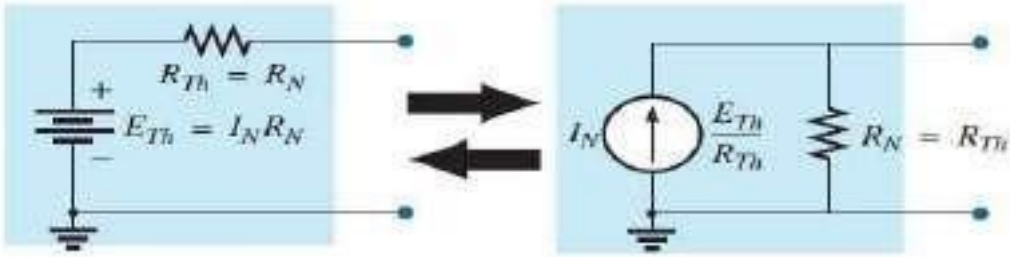

FIG. 9.66
Converting between Thévenin and Norton equivalent circuits.

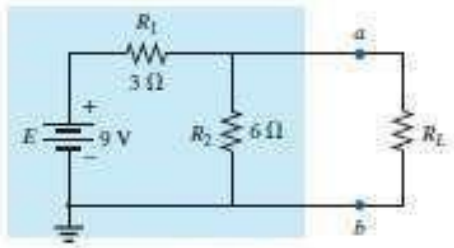

FIG. 9.67
Example 9.12.

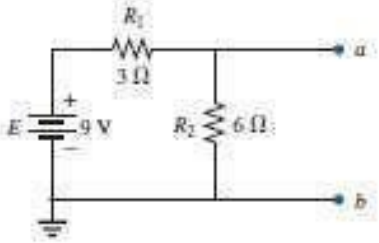

FIG. 9.68
Identifying the terminals of particular interest for the network in Fig. 9.67.

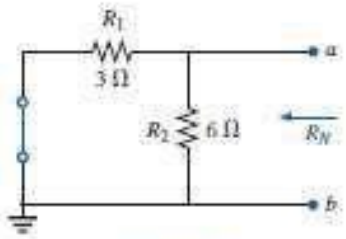

FIG. 9.69
Determining R_N for the network in Fig. 9.68.

EXAMPLE 9.12 Find the Norton equivalent circuit for the network inthe shaded area in Fig. 9.67.

Solution:

Steps 1 and 2: See Fig. 9.68.

Step 3: See Fig. 9.69, and

$$R_N = R_1 \| R_2 = 3\ \Omega \| 6\ \Omega = \frac{(3\ \Omega)(6\ \Omega)}{3\ \Omega + 6\ \Omega} = \frac{18\ \Omega}{9} = \mathbf{2\ \Omega}$$

Step 4: See Fig. 9.70, which clearly indicates that the short-circuit connectionbetween terminals *a* and *b* is in parallel with *R*2 and eliminatesits effect. *IN* is therefore the same as through *R*1, and the full battery voltage appears across *R*1 since

$$V_2 = I_2 R_2 = (0)6\ \Omega = 0\ \text{V}$$

Therefore,

$$I_N = \frac{E}{R_1} = \frac{9\ \text{V}}{3\ \Omega} = \mathbf{3\ A}$$

Step 5: See Fig. 9.71. Thiscircuit is the same as the first one consideredin the development of Thévenin's theorem. A simple conversion indicatesthat the Thévenin circuits are, in fact, the same (Fig. 9.72).

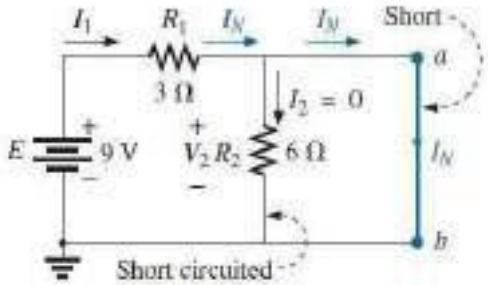

FIG. 9.70
Determining I_N for the network in Fig. 9.68.

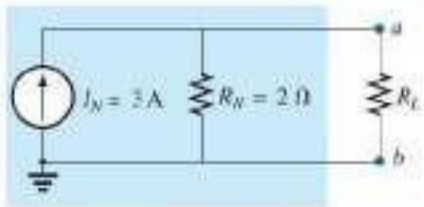

FIG. 9.71
Substituting the Norton equivalent circuit for the network external to the resistor R_L in Fig. 9.67.

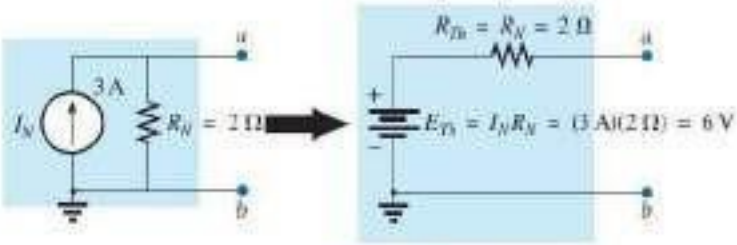

FIG. 9.72
Converting the Norton equivalent circuit in Fig. 9.71 to a Thévenin equivalent circuit.

EXAMPLE 9.13 Find the Norton equivalent circuit for the network external to the 9 _ resistor in Fig. 9.73.

Solution:

Steps 1 and 2: See Fig. 9.74.

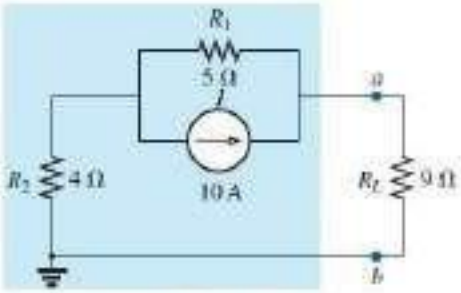

FIG. 9.73
Example 9.13.

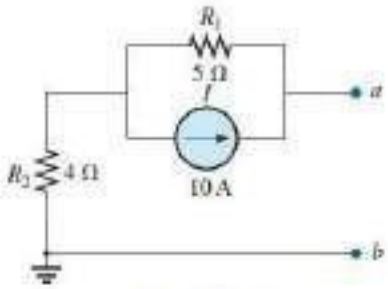

FIG. 9.74
Identifying the terminals of particular interest for the network in Fig. 9.73.

Step 3: See Fig. 9.75, and

$$R_N = R_1 + R_2 = 5\ \Omega + 4\ \Omega = \mathbf{9\ \Omega}$$

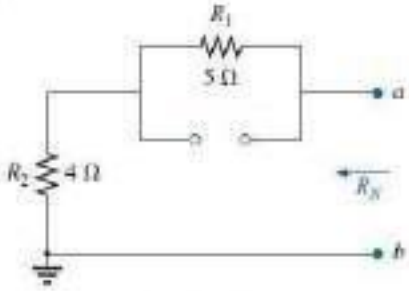

FIG. 9.75
Determining R_N for the network in Fig. 9.74.

Step 4: As shown in Fig. 9.76, the Norton current is the same as the current through the 4 Ω resistor. Applying the current divider rule gives

$$I_N = \frac{R_1 I}{R_1 + R_2} = \frac{(5\ \Omega)(10\ \text{A})}{5\ \Omega + 4\ \Omega} = \frac{50\ \text{A}}{9} = \mathbf{5.56\ A}$$

Step 5: See Fig. 9.77.

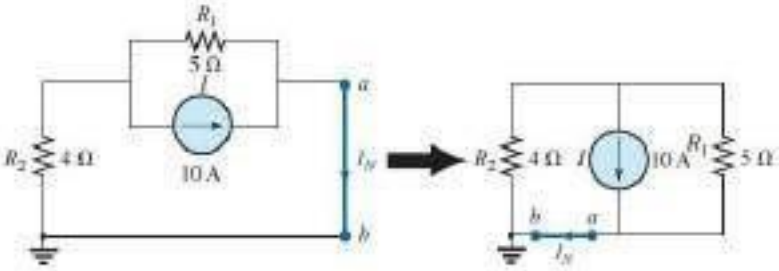

FIG. 9.76
Determining I_N for the network in Fig. 9.74.

FIG. 9.77
Substituting the Norton equivalent circuit for the network external to the resistor R_L in Fig. 9.73.

EXAMPLE 9.14 (Two sources) Find the Norton equivalent circuit forthe portion of the network to the left of *a-b* in Fig. 9.78.

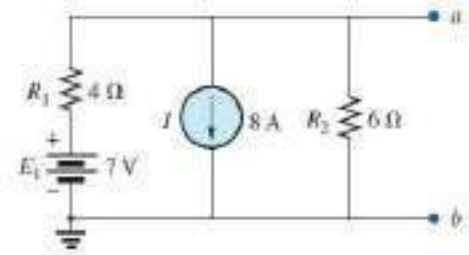

FIG. 9.79
Identifying the terminals of particular interest for the network in Fig. 9.78.

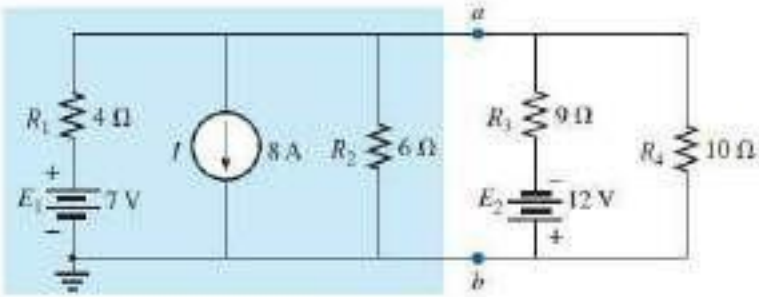

FIG. 9.78
Example 9.14.

Solution:

Steps 1 and 2: See Fig. 9.79.

Step 3: See Fig. 9.80, and

$$R_N = R_1 \| R_2 = 4\ \Omega \| 6\ \Omega = \frac{(4\ \Omega)(6\ \Omega)}{4\ \Omega + 6\ \Omega} = \frac{24\ \Omega}{10} = \mathbf{2.4\ \Omega}$$

Step 4: (Using superposition) For the 7 V battery (Fig. 9.81),

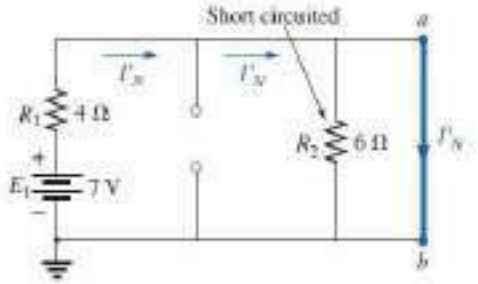

FIG. 9.81
Determining the contribution to I_N from the voltage source E_1.

$$I'_N = \frac{E_1}{R_1} = \frac{7\text{ V}}{4\ \Omega} = 1.75\text{ A}$$

For the 8 A source (Fig. 9.82), we find that both R_1 and R_2 have been "short circuited" by the direct connection between a and b, and

$$I''_N = I = 8\text{ A}$$

The result is

$$I_N = I''_N - I'_N = 8\text{ A} - 1.75\text{ A} = 6.25\text{ A}$$

Step 5: See Fig. 9.83.

9.5 MAXIMUM POWER TRANSFER

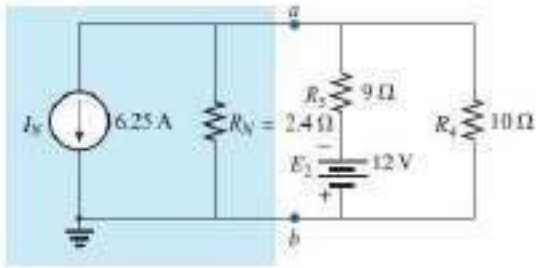

FIG. 9.83
Substituting the Norton equivalent circuit for the network to the left of terminals a-b in Fig. 9.78.

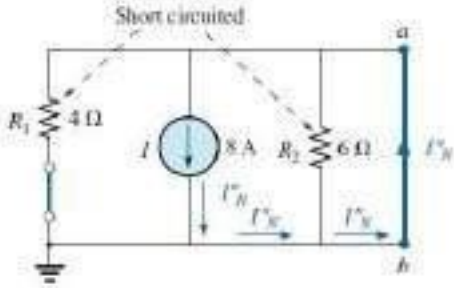

FIG. 9.82
Determining the contribution to I_N from the current source I.

THEOREM

When designing a circuit, it is often important to be able to answer oneof the following questions:

What load should be applied to a system to ensure that the load isreceiving maximum power from the system?

Conversely:

For a particular load, what conditions should be imposed on thesource to ensure that it will deliver the maximum power available?

Even if a load cannot be set at the value that would result in maximumpower transfer, it is often helpful to have some idea of the valuethat will draw maximum power so that you can compare it to the load athand. For instance, if a design calls for a load of 100 , to ensure thatthe load receives maximum power, using a resistor of 1 or 1 k results in a power transfer thatis much less than the maximum possible.

However, using a load of 82 or 120 probably results in a fairlygood level of power transfer.Fortunately, the process of finding the load that will receive maximumpower from a particular system is quite straightforward due to the **maximum power transfer theorem,** which states the following:

A load will receive maximum power from a network when itsresistance is exactly equal to the Thévenin resistance of the networkapplied to the load. That is,

$$R_L = R_{Th} \qquad (9.2)$$

In other words, for the Thévenin equivalent circuit in Fig. 9.84, when the load is set equal to the Thévenin resistance, the load will receive maximum power from the network.

Using Fig. 9.84 with $R_L = R_{Th}$, we can determine the maximum power delivered to the load by first finding the current:

$$I_L = \frac{E_{Th}}{R_{Th} + R_L} = \frac{E_{Th}}{R_{Th} + R_{Th}} = \frac{E_{Th}}{2R_{Th}}$$

Then we substitute into the power equation:

$$P_L = I_L^2 R_L = \left(\frac{E_{Th}}{2R_{Th}}\right)^2 (R_{Th}) = \frac{E_{Th}^2 R_{Th}}{4R_{Th}^2}$$

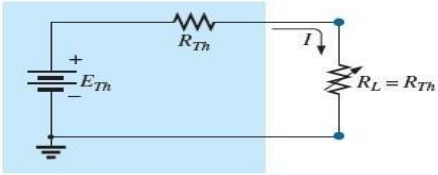

FIG. 9.84
Defining the conditions for maximum power to a load using the Thévenin equivalent circuit.

and

$$P_{L_{max}} = \frac{E_{Th}^2}{4R_{Th}} \quad (9.3)$$

The total power delivered by a supply such as ETh is absorbed by both the Thévenin equivalent resistance and the load resistance. Any power delivered by the source that does not get to the load is lost to the Thévenin resistance.

Under maximum power conditions, only half the power delivered by the source gets to the load. Now, that sounds disastrous, but remember that we are starting out with a fixed Thévenin voltage and resistance, and the above simply tells us that we must make the two resistance levels equal if we want maximum power to the load. On an efficiency basis, we are working at only a 50% level, but we are content because *we are getting maximum power out of our system*.

The dc operating efficiency is defined as the ratio of the power delivered to the load (*PL*) to the power delivered by the source (*Ps*). That is,

$$\eta\% = \frac{P_L}{P_s} \times 100\% \quad (9.4)$$

For the situation where $R_L = R_{Th}$,

$$\eta\% = \frac{I_L^2 R_L}{I_L^2 R_T} \times 100\% = \frac{R_L}{R_T} \times 100\% = \frac{R_{Th}}{R_{Th} + R_{Th}} \times 100\%$$

$$= \frac{R_{Th}}{2R_{Th}} \times 100\% = \frac{1}{2} \times 100\% = \mathbf{50\%}$$

If efficiency is the overriding factor, then the load should be much larger than the internal resistance of the supply. If maximum power transfer is desired and efficiency less of a concern, then the conditions dictated by the maximum power transfer theorem should be applied.

A relatively low efficiency of 50% can be tolerated in situations where power levels are relatively low, such as in a wide variety of electronic systems, where maximum power transfer for the given system is usually more important. However, when large power levels are involved, such as at generating plants, efficiencies of 50% cannot be tolerated. In fact, a great deal of expense and research is dedicated to raising power generating and transmission efficiencies a few percentage points. Raising an efficiency level of a 10 MkW power plant from 94% to 95% (a 1% increase) can save 0.1 MkW, or 100 million watts, of power—an enormous saving. In all of the above discussions, the effect of changing the load was discussed for a fixed Thévenin resistance. Looking at the situation from a different viewpoint, we can say

if the load resistance is fixed and does not match the applied Thévenin equivalent resistance, then some effort should be made (if possible) to redesign the system so that the Thévenin equivalent resistance is closer to the fixed applied load.

In other words, if a designer faces a situation where the load resistance is fixed, he or she should investigate whether the supply section should be replaced or redesigned to create a closer match of resistance levels to produce higher levels of power to the load.

For the Norton equivalent circuit in Fig. 9.90, maximum power willbe delivered to the load when,

$$RL = RN \text{ ..... } \mathbf{(9.5)}$$

This result [Eq. (9.5)] will be used to its fullest advantage in the analysis of transistor networks, where the most frequently applied transistorcircuit model uses a current source rather than a voltage source.

For the Norton circuit in Fig. 9.90,

$$\boxed{P_{L_{max}} = \frac{I_N^2 R_N}{4}} \quad \text{(W)} \qquad \mathbf{(9.6}$$

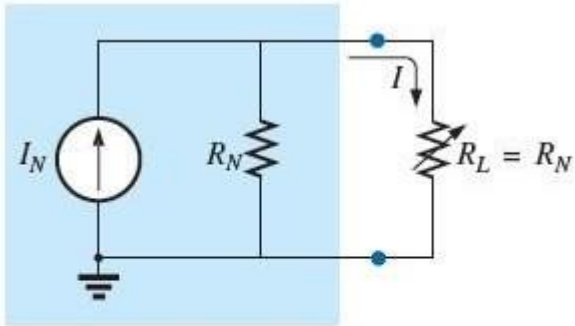

FIG. 9.90
Defining the conditions for maximum power to a load using the Norton equivalent circuit.

To demonstrate that maximum power is indeed transferred to the load under the conditions defined above, consider the Thévenin equivalentcircuit in Fig. 9.85. Before getting into detail, however, if you were to guess what valueof *RL* would result in maximum power transfer to *RL*, you might think that the smaller the value of *RL*, the better it is because the currentreaches a maximum when it is squared in the power equation. The problem is, however, that in the equation *PL = I* 2 *LRL*, theload resistance is amultiplier. As it gets smaller, it forms a smaller product. Then again, youmight suggest larger values of *RL* because the output voltage increases, and power is determined by *PL = V* 2 *L /RL*. This time, however, the loadresistance is in the denominator of the equation and causes the resulting power to decrease. A balance must obviously be made between the load resistance and the resulting current or voltage. The following discussion shows that

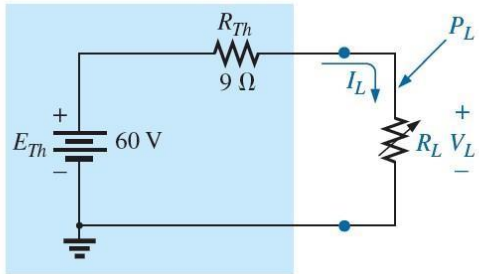

FIG. 9.85
Thévenin equivalent network to be used to validate the maximum power transfer theorem.

maximum power transfer occurs when the load voltage and current are one-half their maximum possible values.

For the circuit in Fig. 9.85, the current through the load is determined by

$$I_L = \frac{E_{Th}}{R_{Th} + R_L} = \frac{60\text{ V}}{9\ \Omega + R_L}$$

The voltage is determined by

$$V_L = \frac{R_L E_{Th}}{R_L + R_{Th}} = \frac{R_L(60\text{ V})}{R_L + R_{Th}}$$

and the power by

$$P_L = I_L^2 R_L = \left(\frac{60\text{ V}}{9\ \Omega + R_L}\right)^2 (R_L) = \frac{3600 R_L}{(9\ \Omega + R_L)^2}$$

If we tabulate the three quantities versus a range of values for R_L from 0.1 Ω to 30 Ω, we obtain the results appearing in Table 9.1. Note in particular that when R_L is equal to the Thévenin resistance of 9 Ω, the

power has a maximum value of 100 W, the current is 3.33 A, or one-half its maximum value of 6.67 A (as would result with a short circuit across the output terminals), and the voltage across the load is 30 V, or one-half its maximum value of 60 V (as would result with an open circuit across its output terminals). As you can see, there is no question that maximum power is transferred to the load when the load equals the Thévenin value.

The power to the load versus the range of resistor values is provided in Fig. 9.86. Note in particular that for values of load resistance less than the Thévenin value, the change is dramatic as it approaches the peak value. However, for values greater than the Thévenin value, the drop is a great deal more gradual. This is important because it tells us the following:

If the load applied is less than the Thévenin resistance, the power to the load will drop off rapidly as it gets smaller. However, if the applied load is greater than the Thévenin resistance, the power to the load will not drop off as rapidly as it increases.

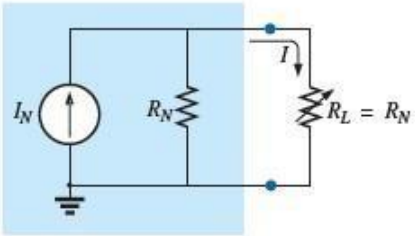

FIG. 9.90
Defining the conditions for maximum power to a load using the Norton equivalent circuit.

In all of the above discussions, the effect of changing the load was discussed for a fixed Thévenin resistance. Looking at the situation from a different viewpoint, we can say

if the load resistance is fixed and does not match the applied Thévenin equivalent resistance, then some effort should be made (if possible) to redesign the system so that the Thévenin equivalent resistance is closer to the fixed applied load.

In other words, if a designer faces a situation where the load resistance is fixed, he or she should investigate whether the supply section should be replaced or redesigned to create a closer match of resistance levels to produce higher levels of power to the load.

For the Norton equivalent circuit in Fig. 9.90, maximum power will be delivered to the load when

$$\boxed{R_L = R_N} \tag{9.5}$$

This result [Eq. (9.5)] will be used to its fullest advantage in the analysis of transistor networks, where the most frequently applied transistor circuit model uses a current source rather than a voltage source.

For the Norton circuit in Fig. 9.90,

$$\boxed{P_{L_{max}} = \frac{I_N^2 R_N}{4}} \quad \text{(W)} \tag{9.6}$$

EXAMPLE 9.15 A dc generator, battery, and laboratory supply are connected to resistive load R_L in Fig. 9.91.

a. For each, determine the value of R_L for maximum power transfer to R_L.
b. Under maximum power conditions, what are the current level and the power to the load for each configuration?
c. What is the efficiency of operation for each supply in part (b)?
d. If a load of 1 kΩ were applied to the laboratory supply, what would the power delivered to the load be? Compare your answer to the level of part (b). What is the level of efficiency?
e. For each supply, determine the value of R_L for 75% efficiency.

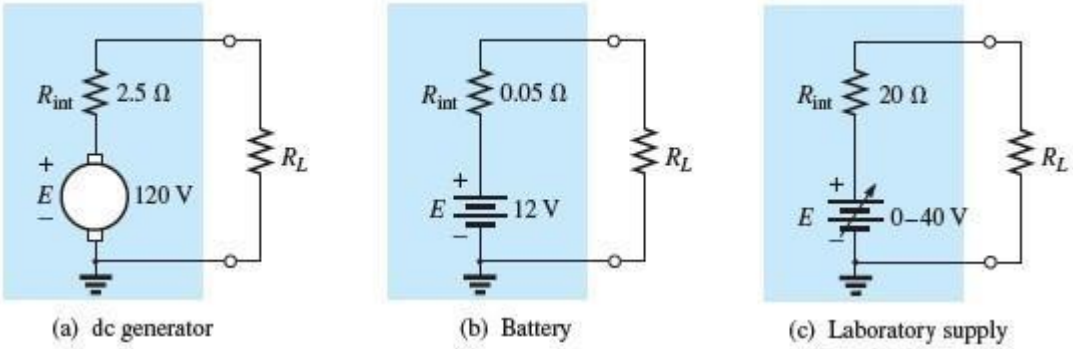

FIG. 9.91
Example 9.15.

Solutions:

a. For the dc generator,

$$R_L = R_{Th} = R_{int} = \mathbf{2.5\ \Omega}$$

For the 12 V car battery,

$$R_L = R_{Th} = R_{int} = \mathbf{0.05\ \Omega}$$

For the dc laboratory supply,

$$R_L = R_{Th} = R_{int} = \mathbf{20\ \Omega}$$

b. For the dc generator,

$$P_{L_{max}} = \frac{E_{Th}^2}{4R_{Th}} = \frac{E^2}{4R_{int}} = \frac{(120\text{ V})^2}{4(2.5\ \Omega)} = \mathbf{1.44\ kW}$$

For the 12 V car battery,

$$P_{L_{max}} = \frac{E_{Th}^2}{4R_{Th}} = \frac{E^2}{4R_{int}} = \frac{(12\text{ V})^2}{4(0.05\ \Omega)} = \mathbf{720\ W}$$

For the dc laboratory supply,

$$P_{L_{max}} = \frac{E_{Th}^2}{4R_{Th}} = \frac{E^2}{4R_{int}} = \frac{(40\text{ V})^2}{4(20\ \Omega)} = \mathbf{20\ W}$$

c. They are all operating under a 50% efficiency level because $R_L = R_{Th}$.

d. The power to the load is determined as follows:

$$I_L = \frac{E}{R_{int} + R_L} = \frac{40\text{ V}}{20\ \Omega + 1000\ \Omega} = \frac{40\text{ V}}{1020\ \Omega} = 39.22\text{ mA}$$

and $$P_L = I_L^2 R_L = (39.22\text{ mA})^2(1000\ \Omega) = \mathbf{1.54\ W}$$

The power level is significantly less than the 20 W achieved in part (b). The efficiency level is

$$\eta\% = \frac{P_L}{P_s} \times 100\% = \frac{1.54\text{ W}}{EI_s} \times 100\% = \frac{1.54\text{ W}}{(40\text{ V})(39.22\text{ mA})} \times 100\%$$

$$= \frac{1.54\text{ W}}{1.57\text{ W}} \times 100\% = \mathbf{98.09\%}$$

which is markedly higher than achieved under maximum power conditions—albeit at the expense of the power level.

e. For the dc generator,

$$\eta = \frac{P_o}{P_s} = \frac{R_L}{R_{Th} + R_L} \text{ (}\eta\text{ in decimal form)}$$

and
$$\eta = \frac{R_L}{R_{Th} + R_L}$$

$$\eta(R_{Th} + R_L) = R_L$$
$$\eta R_{Th} + \eta R_L = R_L$$
$$R_L(1 - \eta) = \eta R_{Th}$$

and
$$\boxed{R_L = \frac{\eta R_{Th}}{1 - \eta}} \qquad \textbf{(9.7)}$$

$$R_L = \frac{0.75(2.5\ \Omega)}{1 - 0.75} = \mathbf{7.5\ \Omega}$$

For the battery,

$$R_L = \frac{0.75(0.05\ \Omega)}{1 - 0.75} = \mathbf{0.15\ \Omega}$$

For the laboratory supply,

$$R_L = \frac{0.75(20\ \Omega)}{1 - 0.75} = \mathbf{60\ \Omega}$$

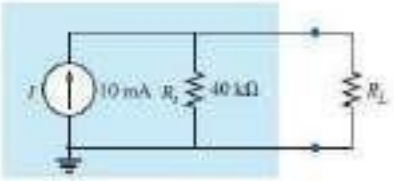

FIG. 9.92
Example 9.16.

EXAMPLE 9.16 The analysis of a transistor network resulted in the reduced equivalent in Fig. 9.92.

a. Find the load resistance that will result in maximum power transfer to the load, and find the maximum power delivered.
b. If the load were changed to 68 kΩ, would you expect a fairly high level of power transfer to the load based on the results of part (a)? What would the new power level be? Is your initial assumption verified?
c. If the load were changed to 8.2 kΩ, would you expect a fairly high level of power transfer to the load based on the results of part (a)? What would the new power level be? Is your initial assumption verified?

Solutions:

a. Replacing the current source by an open-circuit equivalent results in

$$R_{Th} = R_s = 40\ \text{k}\Omega$$

Restoring the current source and finding the open-circuit voltage at the output terminals results in

$$E_{Th} = V_{oc} = IR_s = (10\ \text{mA})(40\ \text{k}\Omega) = 400\ \text{V}$$

For maximum power transfer to the load,

$$R_L = R_{Th} = 40\ \text{k}\Omega$$

with a maximum power level of

$$P_{L_{max}} = \frac{E_{Th}^2}{4R_{Th}} = \frac{(400\ \text{V})^2}{4(40\ \text{k}\Omega)} = 1\ \text{W}$$

b. Yes, because the 68 kΩ load is greater (note Fig. 9.86) than the 40 kΩ load, but relatively close in magnitude.

$$I_L = \frac{E_{Th}}{R_{Th} + R_L} = \frac{400\text{ V}}{40\text{ k}\Omega + 68\text{ k}\Omega} = \frac{400}{108\text{ k}\Omega} \cong 3.7\text{ mA}$$

$$P_L = I_L^2 R_L = (3.7\text{ mA})^2(68\text{ k}\Omega) \cong \mathbf{0.93\text{ W}}$$

Yes, the power level of 0.93 W compared to the 1 W level of part (a) verifies the assumption.

c. No, 8.2 kΩ is quite a bit less (note Fig. 9.86) than the 40 kΩ value.

$$I_L = \frac{E_{Th}}{R_{Th} + R_L} = \frac{400\text{ V}}{40\text{ k}\Omega + 8.2\text{ k}\Omega} = \frac{400\text{ V}}{48.2\text{ k}\Omega} \cong 8.3\text{ mA}$$

$$P_L = I_L^2 R_L = (8.3\text{ mA})^2(8.2\text{ k}\Omega) \cong \mathbf{0.57\text{ W}}$$

Yes, the power level of 0.57 W compared to the 1 W level of part (a) verifies the assumption.

CHAPTER-05
AC CIRCUIT AND RESONANCE

Direct Current		Alternating Current	
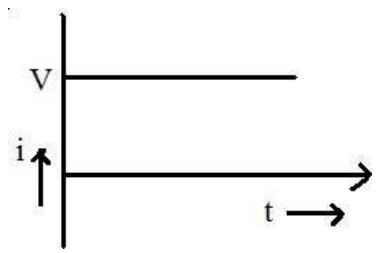		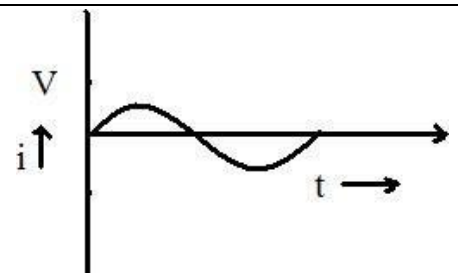	
(1)	D.C. always flow in one direction and whose magnitude remains constant.	(1)	A.C. is one which reverse periodically in direction and whose magnitude undergoes a definite cycle changes in definite intervals of time.
(2)	High cost of production.	(2)	Low cost of production
(3)	It is not possible by D.C. Because D.C. is dangerous to the transformer.	(3)	By using transformer A.C. voltage can be decreased or increased.
(4)	Its transmission cost is too high.	(4)	A.C. can be transmitted to a long distance economically.

Definition of A.C. terms :-

Cycle : It is one complete set of +ve and –ve values of alternating quality spread over 360□ or 2□ radan.

Time Period : It is defined as the time required to complete one cycle.

Frequency : It is defined as the reciprocal of time period. i.e. f = 1/ T

Or

It is defined as the number of cycles completed per second.

Amplitude : It is defined as the maximum value of either +ve half cycle or –ve half cycle.

Phase : It is defined as the angular displacement between two haves is zero.

OR

Two alternating quantity are in phase when each pass through their zero value at the same instant and also attain their maximum value at the same instant in a given cycle.

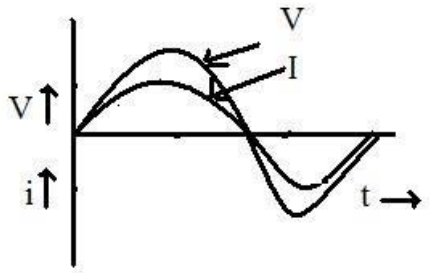

$V = V_m \sin wt$ $i = I_m \sin wt$

Phase Difference :- It is defined as the angular displacement between two alternating quantities.

OR

If the angular displacement between two waves are not zero, then that is known as phase difference. i.e. at a particular time they attain unequal distance.

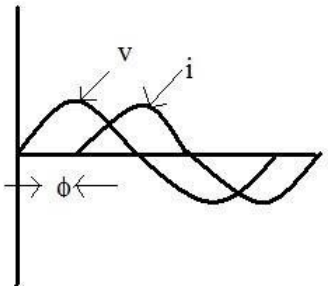

OR

Two quantities are out of phase if they reach their maximum value or minimum value at different times but always have an equal phase angle between them.

Here $V = V_m \sin wt$

$i = I_m \sin (wt-\phi)$

In this case current lags voltage by an angle 'ϕ'.

Phasor Diagram :

Generation of Alternating emf :-

Consider a rectangular coil of 'N" turns, area of cross-section is 'A' nt^2 is placed in

x-axis in an uniform magnetic field of maximum flux density $Bm\ web/nt^2$. The coil is rotating in the magnetic field with a velocity of w radian / second. At time t = 0, the coil is in x-axis. After interval of time 'dt' second the coil make rotating in anti-clockwise direction and makes an angle 'θ' with x-direction.

The perpendicular component of the magnetic field is $\phi = \phi n \cos wt$

According to Faraday's Laws of electro-magnetic Induction

$$e = -N \frac{d\phi}{dt}$$

$$= -N \frac{d}{dt}(\phi_m \cos wt)$$

$$= -N(-\phi_m w \cos wt)$$

$$= N w \phi_m \sin wt$$

$$= 2\pi f N \phi_m \sin wt \; (\because w = 2\pi f) \quad = 2\pi f N B_m A \sin wt \quad e = E_m \sin wt$$

Where $E_m = 2\pi f N B_m A$ f →frequency in Hz

B_m→ Maximum flux density in Wb/mt^2

Now when θ or wt = 90°

$e = E_m$

i.e. $E_m = 2\pi f N B_m A$

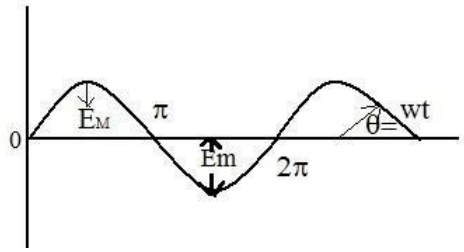

Root Mean Square (R.M.S) Value :→

The r.m.s. value of an a.c. is defined by that steady (d.c.) current which when flowing through a given circuit for a given time produces same heat as produced by the alternating current when flowing through the same circuit for the same time.

Sinuscdial alternating current is

$i = I_m \sin wt = I_m \sin \theta$

The mean of squares of the instantaneous values of current over one complete cycle

$$= \int_0^{2\pi} \frac{i^2 . d\theta}{(2\pi - 0)}$$

The square root of this value is

$$= \sqrt{\frac{\int_0^{2\pi} i^2 . d\theta}{2\pi}}$$

$$= \sqrt{\frac{\int_0^{2\pi} (I_m \sin\theta)^2 d\theta}{2\pi}}$$

$$= \sqrt{\frac{I_m^2}{2\pi} \int_0^{2\pi} \sin^2\theta . d\theta}$$

$$d\theta = \sqrt{\frac{I_m^2}{2\pi} \int_0^{2\pi} \left(\frac{1-\cos 2\theta}{2}\right)}$$

$$= \sqrt{\frac{I_m^2}{4\pi} \int_0^{2\pi} (1-\cos 2\theta) d\theta}$$

$$= \sqrt{\frac{I_m^2}{4\pi} \left[\frac{\theta}{2} - \sin 2\theta\right]_0^{2\pi}}$$

$$d\theta = \sqrt{\frac{I_m^2}{4\pi} \int_0^{2\pi} \left(2\pi - \frac{\sin 4\pi}{2}\right)}$$

$$= \sqrt{\frac{I_m^2}{4\pi} \int_0^{2\pi} (2\pi - 0)}$$

$$= \sqrt{\frac{I_m^2}{2}} = \frac{I_m}{\sqrt{2}}$$

$$I_{r.m.s} = \frac{I_m}{\sqrt{2}} = 0.707 \ I_m$$

Average Value :→

The average value of an alternating current is expressed by that steady current (d.c.) which transfers across any circuit the same charge as it transferred by that alternating current during the sae time.

The equation of the alternating current is $i = I_m \sin\theta$

$$I_{av} = \int_0^{\pi} \frac{i \ .d\theta}{(\pi - 0)}$$

$$= \int_0^{\pi} \frac{I_m . \sin\theta}{\pi} d\theta = \frac{I_m}{\pi} \int_0^{\pi} \sin\theta . d\theta$$

$$= \frac{I_m}{\pi} \left[-\cos\theta\right]_0^{\pi} = \frac{I_m}{\pi} \left[-\cos\pi - (\cos 0^0\right]$$

$$= \frac{I_m}{\pi} \left[1 - 0(-1)\right]$$

$$I_{av} = \frac{2I_m}{\pi}$$

$$I_{av} = \frac{2 \times Maximum\ Current}{\pi}$$

Hence, $I_{av} = 0.637 I_m$

The average value over a complete cycle is zero

Amplitude factor/ Peak factor/ Crest factor :- It is defined as the ratio of maximum value to r.m.s value.

$$Ka = \frac{MaximumValue}{R.M.S.Value} = \frac{I_m}{\frac{I_m}{\sqrt{2}}} = \sqrt{2} = 1.414$$

Form factor : - It is defined as the ratio of r.m.s value to average value.

$$Kf = \frac{r.m.s.Value}{Average.Value} = \frac{0.707 I_m}{0.637 I_m} = \sqrt{2} = 1.414$$

$$Kf = 1.11$$

Phasor or Vector Representation of Alternating Quantity :→

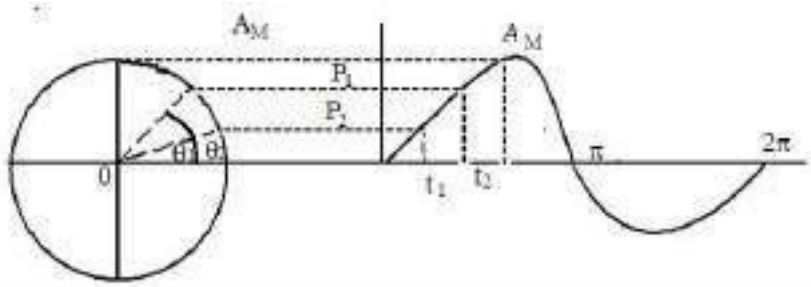

An alternating current or voltage, (quantity) in a vector quantity which has magnitude as well as direction. Let the alternating value of current be represented by the equation e = E_m Sin wt. The projection of E_m on Y-axis at any instant gives the instantaneous value of alternating current. Since the instantaneous values are continuously changing, so they are represented by a rotating vector or phasor. A phasor is a vector rotating at a constant angular velocity

At $t_1, e_1 = E_{m1} \sin wt_1$

At $t_2, e_2 = E_{m2} \sin wt_2$

Addition of two alternating Current :→

Let $e_1 = E_{m1} \sin wt$

$e_2 = E_{m2} \sin(wt - \phi)$

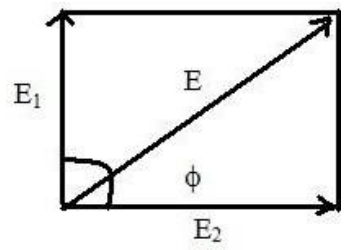

The sum of two sine waves of the same frequency is another sine wave of same frequency but of a different maximum value and Phase.

$$e = \sqrt{e_1^2 + e_2^2 + 2e_1e_2\cos\phi}$$

Phasor Algebra :→

A vector quantity can be expressed in terms of

(i) Rectangular or Cartesian form

(ii) Trigonometric form

(iii) Exponential form

(iv) Polar form

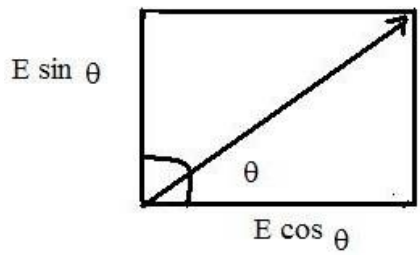

$$E = a + jb$$

$$= E(\cos\theta + j\sin\theta)$$

Where a = E cos θ is the active part b = E sin θ is the reactive part

$$\theta = \tan^{-1}\left|\left(\frac{b}{a}\right)\right| = \text{Phase angle}$$

$$= \sqrt{-1}(90^o)\, j^2$$

$$= -1(180^o)\, j^3$$

$$= -j(270^o)\, j^4$$

$$= 1 \quad (360^o)$$

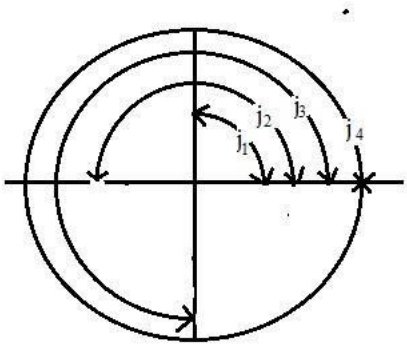

(i) Rectangular for :-

$E = a \pm jb$ $\tan\theta = b/a$ **(ii) Trigonometric form :-**

$$E = E(\cos\theta \pm j\sin\theta)$$

(iii) Exponential form :-

$$E = Ee^{\pm j\theta}$$

(iv) Polar form :-

$$E = E/\pm e \qquad (E = \sqrt{a^2 + b^2})$$

Addition or Subtration :-

$E_1 = a_1 + jb_1$

$E_2 = a_2 + jb_2$

$E_1 \pm E_2 = (a_1 + a_2) \pm (b_1 + b_2$

$\phi = \tan^{-1}\left(\frac{ab_{11} + +ba_{22}}{}\right)$

Multiplication : -

$E_1 \times E_2 = (a_1 + ja_1) \pm (a_1 + jb_2)$

$= (a_1a_2 - b_1b_2) + j(a_1a_2 + b_1b_2)$

$\phi = \tan^{-1}\left(\frac{aa_{11}ba_{22} + -bb_{11}ab_{22}}{}\right)$

$E_1 = E_1\angle\theta_1$

$E_2 = E_2\angle\theta_2$

$E_1 \times E_2 = E_1E_2 \quad \angle\phi_1 + \phi_2$

Division :-

$E_1 = E_1\angle\theta_1$

$E_2 = E_2\angle\theta_2$

$\frac{E_1}{E_2} = \frac{E_1\angle\theta_1}{E_2\angle\theta_2} = \frac{E_1}{E_2}\angle\theta_1 - \theta_2$

A.C. through Pure Resistance :→

Let the resistance of R ohm is connected across to A.C supply of applied voltage

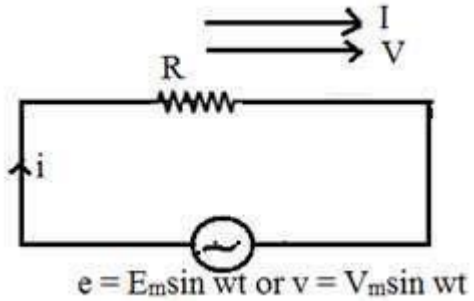

$e = E_m \sin wt$ ----------(1)

Let 'I' is the instantaneous current .

Here $e = iR$

$\Rightarrow i = e/R$

$i = E_m \sin wt / R$----------(2)

By comparing equation (1) and equation (2) we get alternating voltage and current in a pure resistive circuit are in phase

Instantaneous power is given by

P = ei

= E_m sin wt . I_m sin wt

= E_m I_m $\sin^2$ wt

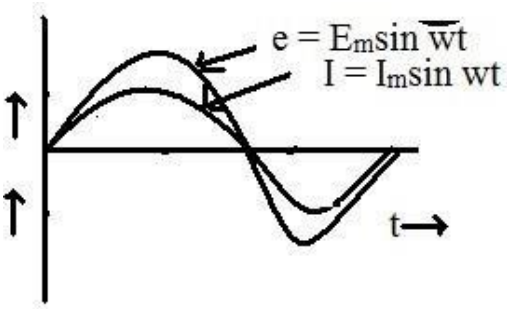

$$= \frac{E_m}{\sqrt{2}} \cdot \frac{I_m}{\sqrt{2}} \cdot (1 - \cos 2wt)$$

$$P = \frac{E_m}{\sqrt{2}} \cdot \frac{I_m}{\sqrt{2}} - \frac{E_m}{\sqrt{2}} \cdot \frac{I_m}{\sqrt{2}} \cdot \cos 2wt$$

i.e. $P = \frac{V_m}{\sqrt{2}} \cdot \frac{I_m}{\sqrt{2}} - \frac{V_m}{\sqrt{2}} \cdot \frac{I_m}{\sqrt{2}} \cdot \cos 2wt$

$$= \frac{E \quad I}{2} \cdot 2\sin wt$$

$\frac{V_m}{\sqrt{2}} \cdot \frac{I_m}{\sqrt{2}}$ Where . is called constant part of power.

$\frac{V_m}{\sqrt{2}} \cdot \frac{I_m}{\sqrt{2}} \cdot \cos 2wt$ is called fluctuating part of power.

The fluctuating part $\frac{V_m I_m}{2} \cdot \cos 2wt$ of frequency double that of voltage and current waves.

Hence power for the whole cycle is $P = \frac{V_m}{\sqrt{2}} \cdot \frac{I_m}{\sqrt{2}} = V_{rms} . I_{rms}$

⇒ P = VI watts

A.C through Pure Inductance :→

Let inductance of ‘L’ henry is connected across the A.C. supply

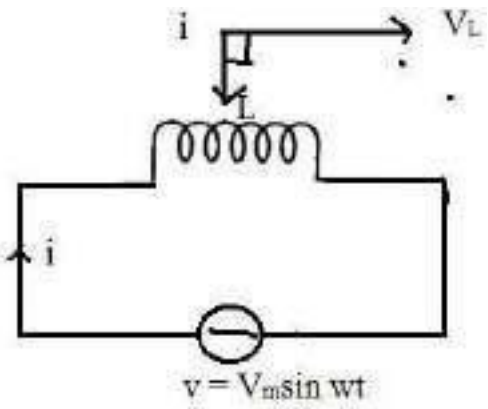

$$v = V_m \sin wt \text{ ----------} (1)$$

According to Faraday's laws of electromagnetic inductance the emf induced across the inductance di

$$V = L \frac{di}{dt}$$

$\frac{di}{dt}$ is the rate of change of current

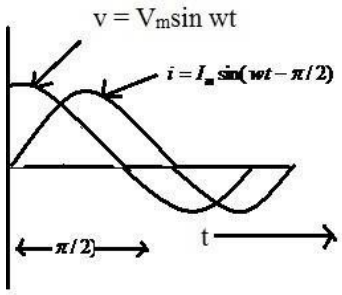

$$V_m \sin wt = L \frac{di}{dt}$$

$$\frac{di}{dt} = \frac{V_m \sin wt}{L}$$

$$\Rightarrow di = \frac{V_m}{L} \sin wt . dt$$

Integrating both sides,

$$\int di = \int \frac{V_m}{L} \sin wt . dt$$

$$= \frac{V_m}{L} \left(-\frac{\cos wt}{w} \right) i$$

$$= -\frac{V_m \cos wt}{wL} i$$

$$i = -\frac{V_m}{wL} \cos wt$$

$$= -\frac{V_m}{} \sin\left(wt - \frac{\pi}{} \right) i$$

$wL \quad \left(\quad 2 \right)$

$$= - \frac{V_m}{X_L} \sin\left(wt - \frac{\pi}{2}\right) \quad [\because X_L = 2\pi fL = wL]$$

Maximum value of i is

$I_m = \frac{V_m}{X_L}$ when $\sin\left(wt - \frac{\pi}{2}\right)$ is unity.

Hence the equation of current becomes $i = I_m \sin(wt - \pi/2)$

So we find that if applied voltage is rep[resented by $v = V_m \sin wt$, then current flowing in a purely inductive circuit is given by $i = I_m \sin(wt - \pi/2)$

Here current lags voltage by an angle π/2 Radian.

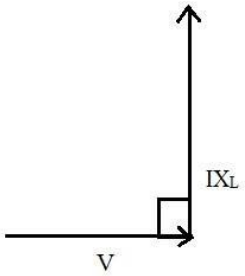

Power factor = cos ϕ

= cos 90°

= 0

Power Consumed = VI cos ϕ

= VI × 0

= 0

Hence, the power consumed by a purely Inductive circuit is zero.

A.C. Through Pure Capacitance : →

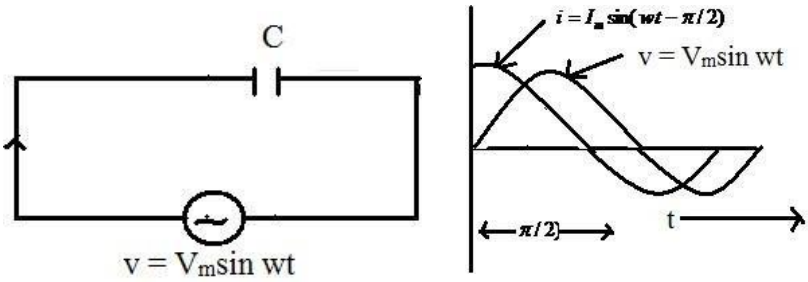

Let a capacitance of 'C" farad is connected across the A.C. supply of applied voltage $v = V_m \sin wt$ ----------(1)

Let 'q' = change on plates when p.d. between two plates of capacitor is 'v'

$q = cv$

$$q = cV_m \sin wt$$

$$\frac{dq}{dt} = c \frac{d}{dt}(V_m \sin wt)$$

$i = cV_m \sin wt$

$= wcV_m \cos wt$

$$= \frac{V_m}{1/wc} = \cos wt$$

$$= \frac{V_m}{X_c} = \cos wt \qquad [\because X_c = \frac{1}{wc} = \frac{1}{2\pi fc}$$ is known as capacitive reactance in ohm.]

$= I_m \cos wt$

$= I_m \sin(wt + \pi/2)$

Here current leads the supply voltage by an angle π/2 radian.

Power factor $= \cos \phi$

$= \cos 90° = 0$

Power Consumed $= VI \cos \phi$

$= VI \times 0 = 0$

The power consumed by a pure capacitive circuit is zero.

A.C. Through R-L Series Circuit : →

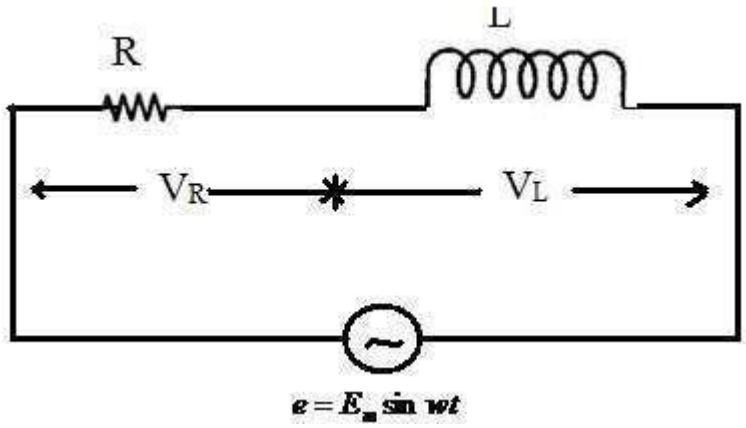

The resistance of R-ohm and inductance of L-henry are connected in series across the A.C. supply of applied voltage $e = E_m \sin wt$ ---------- (1)

$$V = V_R + jV_L$$

$$= \sqrt{V_R^2 + V_L^2} \angle \phi = \tan^{-1}\left(\frac{X_L}{\ }\right)$$

$$= \sqrt{(IR)^2 + (IX_L)^2} \angle \phi = \tan^{-1}\left(\frac{X_L}{R}\right)$$

$$= I\sqrt{R^2 + X_L^2} \angle \phi = \tan^{-1}\left(\frac{X_L}{R}\right) \qquad \left(\frac{\ }{R}\right)$$

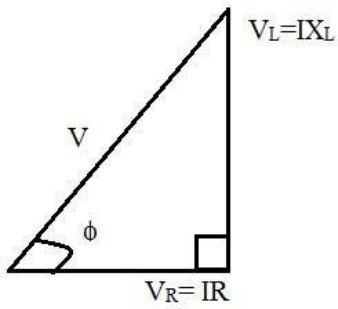

$V = IZ\angle\phi = \tan^{-1}\left(\frac{X_L}{R}\right)$

Where $Z = \sqrt{R^2 + X_L^2}$

$= R + jX_L$ is known as impedance of R-L series Circuit.

$$I = \frac{V}{Z\angle\phi} = \frac{E^m \sin wt}{Z\angle\phi}$$

$$I = I_m \sin(wt - \phi)$$

Here current lags the supply voltage by an angle ϕ.

Power Factor :→ It is the cosine of the angle between the voltage and current.

OR

It is the ratio of active power to apparent power.

OR

It is the ratio of resistance to inpedence .

Power :→

$$= v.i$$

$$= V_m \sin wt . I_m \sin(wt - \phi)$$

$$= V_m I_m \sin wt . \sin(wt - \phi)$$

$$= \frac{1}{2} V_m I_m 2\sin wt . \sin(wt - \phi)$$

$$= \frac{1}{2} V_m I_m [\cos\phi - \cos 2(wt - \phi)]$$

Obviously the power consists of two parts.

(i) a constant part $\frac{1}{2} V_m I_m \cos\phi$ which contributes to real power.

(ii) a pulsating component $\frac{1}{2} V_m I_m \cos(2wt - \phi)$ which has a frequency twice that of the voltage and current. It does not contribute to actual power since its average value over a complete cycle is zero.

Hence average power consumed

$$= \frac{1}{2} V_m I_m \cos\phi$$

$$= \frac{V_m}{\sqrt{2}} \frac{I_m}{\sqrt{2}} . \cos\phi$$

$$= VI \cos\phi$$

Where V & I represents the r.m.s value.

A.C. Through R-C Series Circuit : →

The resistance of ‘R’-ohm and capacitance of ‘C’ farad is connected across the A.C. supply of applied voltage

$e = E_m \sin wt$ ---------- (1)

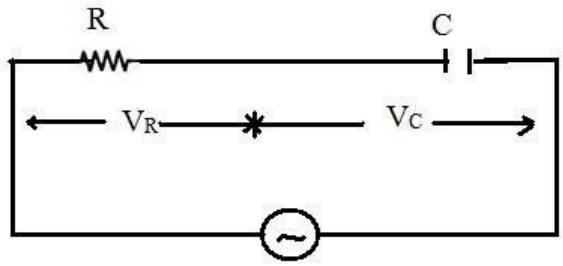

$$V = V_R + (-jV_C)$$

$$= IR + (-jIX_C)$$

$$= I(R - jX_C)$$

$$V = IZ$$

Where $Z_C = \sqrt{R^2 + X_C^2} = R - jX$ =is known as impedance of R-C series Circuit.

$$Z = R - jX_C$$

$$= \sqrt{R^2 + X_C^2}\left(\frac{X_C}{R}\right)$$

$$\angle -\phi = \tan^{-1}\left(\frac{\quad}{R}\right)$$

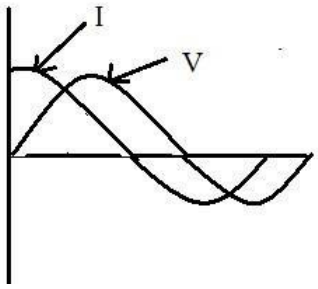

$$V = IZ\angle -\phi$$

$$\Rightarrow I = \frac{V}{Z\angle -\phi}$$

$$= \frac{E_m \sin wt}{Z\angle -\phi}$$

$$= \frac{E_m}{Z}\sin(wt + \phi)$$

$$\Rightarrow I = I_m \sin(wt + \phi)$$

Here current leads the supply voltage by an angle ‘ϕ’.

A.C. Through R-L-C Series Circuit : →

Let a resistance of 'R'-ohm inductance of 'L' henry and a capacitance of 'C' farad are connected across the A.C. supply in series of applied voltage

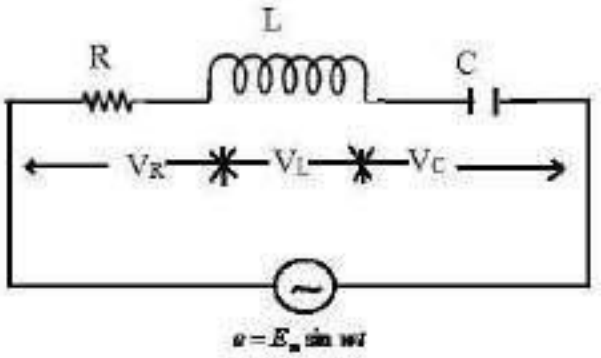

$$e = E_m \sin wt \text{ ----------(1)}$$

$$\vec{e} = \vec{V}_R + \vec{V}_L + \vec{V}_C$$

$$= V_R + jV_L - jV_C$$

$$= V_R + j(V_L - V_C)$$

$$= I_R + j(IX_L - IX_C)$$

$$= I[R + j(X_L - X_C)]$$

$$= I\sqrt{R^2 + (X_L - X_C)^2} \angle \pm\phi = \tan^{-1}\left(\frac{X_L - X_C}{R}\right)$$

$$= IZ\angle \pm\phi$$

Where $Z = \sqrt{R^2 + (X_L - X_C)^2}$ is known as the impedance of R-L-C Series Circuit.

If $X_L > X_C$, then the angle is +ve.

If $X_L < X_C$, then the angle is -ve.

Impedance is defined as the phasor sum of resistance and net reactance $e = IZ\angle \pm\phi$

$$\Rightarrow I = \frac{e}{Z\angle \pm\phi} = \frac{IZ\angle \pm\phi}{Z\angle \pm\phi} = \frac{E_m \sin wt}{Z\angle \pm\phi} = I_m \sin(wt \pm\phi)$$

(1) If $X_L > X_C$, then P.f will be lagging.

(2) If $X_L < X_C$, then, P.f will be leading.

(3) If $X_L = X_C$, then, the circuit will be resistive one. The p.f. becomes unity and the resonance occurs.

REASONANCE

It is defined as the resonance in electrical circuit having passive or active elements represents a particular state when the current and the voltage in the circuit is maximum and minimum with respect to the magnitude of excitation at a particular frequency and the impedances being either minimum or maximum at unity power factor

Resonance are classified into two types.

(1) Series Resonance

(2) Parallel Resonance

(1) Series Resonance :- Let a resistance of 'R' ohm, inductance of 'L' henry and capacitance of 'C' farad are connected in series across A.C. supply

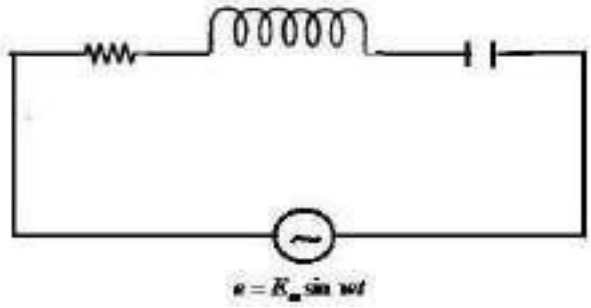

$$e = E_m \sin wt$$

The impedance of the circuit

$$Z = R + j(X_L - X_C)]$$

$$Z = \sqrt{R^2 + (X_L - X_C)^2}$$

The condition of series resonance:

The resonance will occur when the reactive part of the line current is zero The p.f. becomes unity.

The net reactance will be zero.

The current becomes maximum.

At resonance net reactance is zero

$$X_L - X_C = 0$$

$$\Rightarrow X_L = X_C$$

$$\Rightarrow W_o L = \frac{1}{W_o C}$$

$$\Rightarrow W_o^2 LC = 1$$

$$\Rightarrow W_{o2} = \frac{1}{LC}$$

$$\Rightarrow W_o = \frac{1}{\sqrt{LC}}$$

$$\Rightarrow 2\pi f_o = \frac{1}{\sqrt{LC}}$$

$$\Rightarrow f_o = \frac{1}{2\pi\sqrt{LC}}$$

Resonant frequency (f_o) = $\frac{1}{2\pi} \cdot \frac{1}{\sqrt{LC}}$

Impedance at Resonance

$Z_0 = R$

Current at Resonance

$$I_o = \frac{V}{R}$$

Power factor at resonance

$$p.f. = \frac{R}{Z_o} = \frac{R}{R} = 1 \qquad [\because Z_o = R]$$

Resonance Curve :-

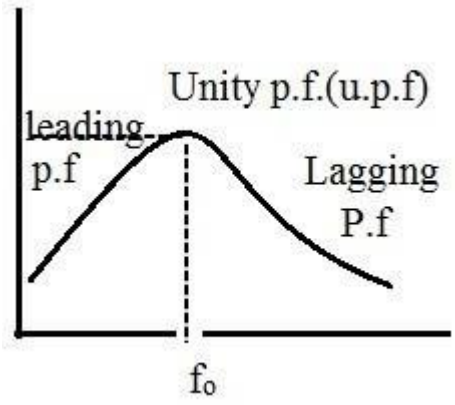

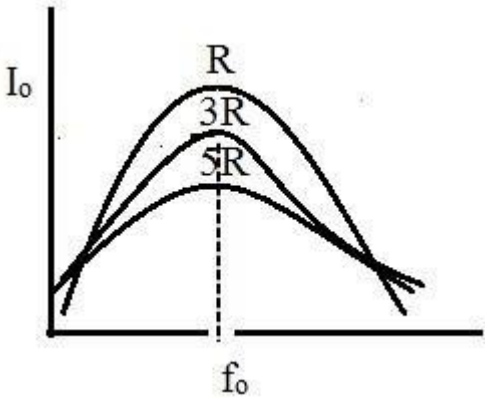

At low frequency the X_c is greater and the circuit behaves leading and at high frequency the X_L becomes high and the circuit behaves lagging circuit.

If the resistance will be low the curve will be stiff (peak).

- If the resistance will go oh increasing the current goes on decreasing and the curve become flat.

Band Width :→

At point 'A' the power loss is I_0^2R.

The frequency is f_0 which is at resonance.

At point 'B' the power loss is $\frac{I^{02}R}{2}$.

The power loss is 50% of the power loss at point 'A"/

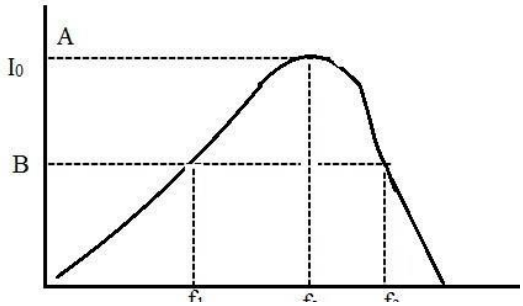

Hence the frequencies corresponding to point 'B' is known as half power frequencies f_1 & f_2.

f_1 = Lower half power frequency

$$f_1 = f_0 - \frac{R}{4\pi L}$$

F_2 = Upper half power frequency

$$f_2 = f_0 + \frac{R}{4\pi L}$$

Band width (B.W.) is defined as the difference between upper half power frequency ad lower half power frequency.

$$\text{B.W.} = f_2 - f_1 = \frac{R}{2\pi L}$$

Selectivity : →

Selectivity is defined as the ratio of Band width to resonant frequency

$$\text{Selectivity} = \frac{B.W.}{f_0} \quad \frac{R}{2\pi L} = \qquad \textit{Selectivity} = \frac{R}{2\pi f_o L}$$

Quality Factor (Q-factor) :→

It is defined as the ratio of 2π × Maximum energy stored to energy dissipated per cycle

$$\text{Q-factor} = \frac{2\pi \times \frac{1}{2} L I_0^2}{I^2 RT}$$

$$= \frac{\pi L (2I)^2}{I^2 RT}$$

$$= \frac{\pi L . 2I^2}{I^2 RT}$$

$$= \frac{\pi L . 2I^2}{I^2 RT}$$

$$= \frac{2\pi L.}{RT}$$

$$\text{Quality factor} = \frac{2\pi f_0 L.}{R}$$

[|| L = 1_I. = f0 ||]

Quality factor is defined as the reciprocal of power factor.

$$\text{Q factor} = \frac{1.}{\cos\phi}$$

It is the reciprocal of selectivity.

$$\text{Q-factor Or Magnification factor} = \frac{\text{Voltage across Inductor.}}{\text{Voltage across resistor}}$$

$$= \frac{I_0 X_L}{I_0 R}$$

$$= \frac{X_L}{R}$$

$$= \frac{2\pi f_0 L}{R} = \frac{W_0 L}{R}$$

$$\text{Q- factor} = \frac{W L}{R}$$

$$\text{Q-factor factor} = \frac{\text{Voltage across Capacotor.}}{\text{Voltage across resistor}}$$

$$I^0 X^c$$

$$= I_0 R$$

$$= \frac{X^C}{R}$$

$$= \frac{1}{2\pi f_0 C} = \frac{1}{2\pi f_0 CR}$$

$$\text{Q-factor} = \frac{1}{W_0 CR}$$

$$\frac{Q^2}{R} = \frac{W^0 L}{W_0 CR} \times 1$$

$$Q^2 = \frac{1}{R^2 C}$$

$$Q = \sqrt{\frac{1}{R^2 C}}$$

$$Q = \frac{1}{R}\sqrt{\frac{L}{C}}$$

Graphical Method :→

(1) Resistance is independent of frequency It represents a straight line.

(2) Inductive Reactance $X_L = 2\pi fL$

It is directly proportional to frequency. As the frequency increases , X_L increases

(3) Capacitive Reactance $X_C = = \frac{1}{2\pi fC}$

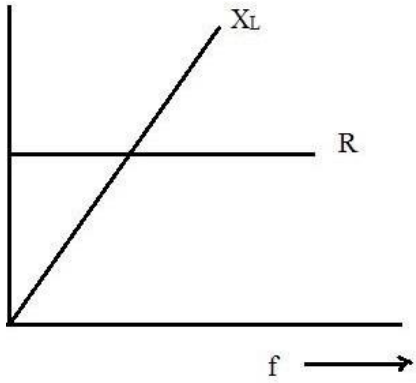

It is inversely proportional to frequency. As the frequency increases, X_C decreases.

When frequency increases, X_L increases and X_C decreases from the higher value.

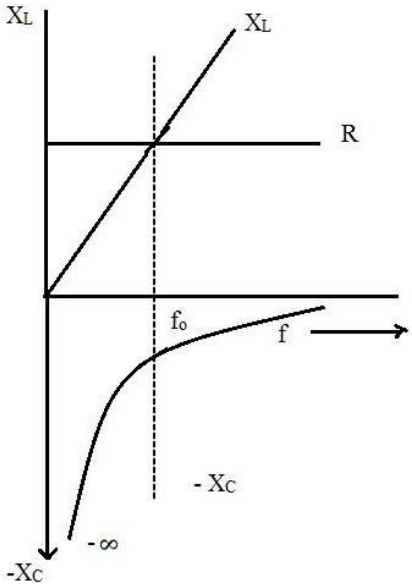

At a certain frequency. $X_L = X_C$

That particular frequency is known as Resonant frequency.

Variation of circuit parameter in series resonance:

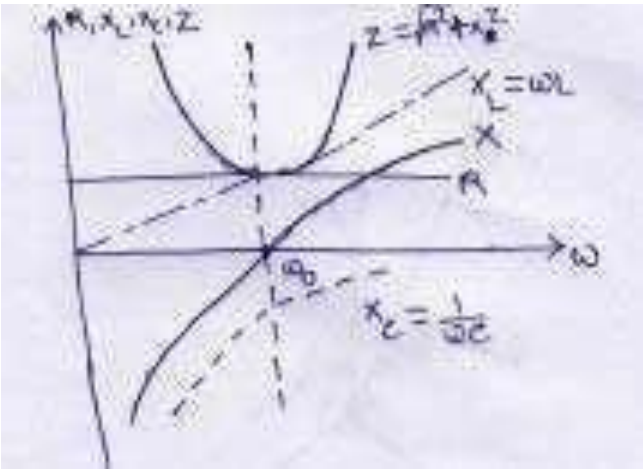

(2) Parallel Resonance :- Resonance will occur when the reactive part of the line current is zero.

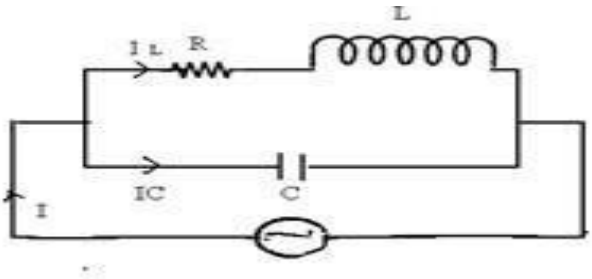

At resonance,

$$I_C - I_L \sin\phi = 0$$

$$I_C = I_L \sin\phi$$

$$\Rightarrow \frac{V}{X_C} = \frac{V}{\sqrt{R^2 + X_L^2}} \sin\phi$$

$$\Rightarrow \frac{V}{X_C} = \frac{V}{\sqrt{R^2 + X_L^2}} \times \frac{X_L}{\sqrt{R^2 + X_L^2}}$$

$$\Rightarrow \frac{1}{X_C} = \frac{X_L}{R^2 + X_L^2}$$

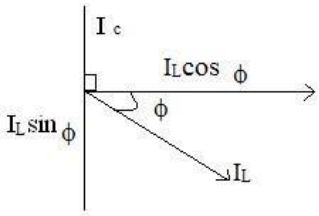

$$\Rightarrow R^2 + X_L^2 = X_L . X_C$$

$$\Rightarrow Z^2 = X_L . X_C = W_0 L \times W_0 C = \frac{L}{C}$$

$$Z^2 = \frac{L}{C}$$

$$\Rightarrow R^2 + X_L^2 = \frac{L}{C}$$

$$\Rightarrow R^2 + (2\pi f_0 L)^2 = \frac{L}{C}$$

$$\Rightarrow R^2 + 4\pi^2 f_0^2 L^2 = \frac{L}{C}$$

$$\Rightarrow 4\pi^2 f_0^2 L^2 = \frac{L}{C} - R^2$$

$$\Rightarrow f_0^2 = \frac{1}{4\pi^2 L}\left(\frac{L}{C} - R^2\right)$$

$$= \sqrt{\frac{1}{4\pi^2 L}\left(\frac{L}{C} - R^2\right)}$$

$$\Rightarrow f_0 = \frac{1}{2\pi}\sqrt{\frac{1}{LC} - \frac{R^2}{L^2}}$$

f_0 = Resonant frequency in parallel circuit.

Current at Resonance = $I_L \cos\phi$

$$= \frac{V}{\sqrt{R^2 + X_L^2}} \cdot \frac{R}{\sqrt{R^2 + X_L^2}}$$

$$= \frac{VR}{R^2 + X_L^2}$$

$$= \frac{VR}{Z^2}$$

$$= \frac{VR}{L/C} = \frac{V}{L/RC}$$

$$= \frac{V}{\text{Dynamic Impedence}}$$

$L/RC \rightarrow$ Dynamic Impedance of the circuit. or, dynamic impedances is defined as the impedance at resonance frequency in parallel circuit.

Parallel Circuit :→

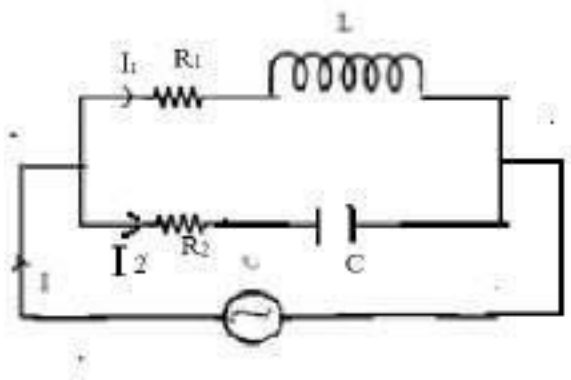

The parallel resonance condition:

When the reactive part of the line current is zero.

The net reactance is zero.

The line current will be minimum.

The power factor will be unity

Impedance $Z_1 = R_1 + jX_L$

$Z_2 = R_2 - jX_C$

Admittance $Y_1 = \frac{1}{Z_1} = \frac{1}{R_1 + jX_L}$

$$= \frac{(R_1 + jX_L)}{(R_1 + jX_L)(R_1 - jX_L)}$$

$$= \frac{R_1 + jX_L}{R_1^2 + X_L^2}$$

$$Y_1 = \frac{R_1}{R_1^2 + X_L^2} - j\frac{X_L}{R_1^2 + X_L^2}$$

Admittance $Y_2 = \frac{1}{Z_2} = \frac{1}{R_1 + jX_C}$

$$= \frac{(R_2 + jX_C)}{(R2_1 - jX_C)(R_2 + jX_C)}$$

$$= \frac{R_2 + jX_L}{R_2^2 + X_C^2}$$

$$Y_2 = \frac{R^2}{R_2^2 + X_{C2}^2} + j\frac{X_C}{R_2^2 + X_{C2}^2}$$

Total Admittance Admittance $\left(\frac{1}{Z}\right) = \frac{1}{Z_1} + \frac{1}{Z_2}$

$$\Rightarrow Y = Y_1 + Y_2 \qquad R_1 + X_L \quad R_2 + X_C$$

$$\Rightarrow Y = \frac{R_1}{R_1^2 + X_L^2} - j\frac{X_L}{R_1^2 + X_L^2} + \frac{R2_2}{R_{12}^2 + X_{L2}^2} + j\frac{X_C}{R_{22}^2 + X_{C2}^2} \Rightarrow$$

$$\Rightarrow Y = \frac{R_1}{R_1^2 + X_L^2} + \frac{R_2}{R_2^2 + X_C^2} - \frac{\quad}{R_2 + X_C} \quad \frac{\quad}{R_2 + X_C} \Rightarrow X\left(R^2 + X^2\right) = X\left(R^2 + X\right.$$

At Resonance,

$$\frac{X_L}{R_1^2 + X_L^2} - \frac{X_C}{R_2^2 + X_C^2} = 0$$

$$j\left(\left(R_{12}X_{L} + X_{L2} - R_{22}X_{C} + X_{C2}\right)\right)$$

$$L_2 \qquad C \qquad C_1 \qquad L$$

$$\Rightarrow 2\pi fL\left(\left(R_{22} + \frac{4\pi^2 1 f^2 C^2}{}\right)\right) = 2\pi 1 fC\left(R_{12} + 4\pi^2 f^2 L^2\right)$$

$$\Rightarrow 2\pi fLR_2^2 + \frac{L}{2\pi fC^2} = \frac{R_1^2}{2\pi fC} + \frac{2\pi fL^2}{C}$$

$$\Rightarrow \frac{L}{2\pi fC^2} - \frac{R_1^2}{2\pi fC} = \frac{2\pi fL^2}{C} - 2\pi fLR_2^2$$

$$\Rightarrow \frac{1}{2\pi fC}\left(\frac{L}{C} - R_{12}\right) = 2\pi fL\left(\frac{L}{C} - R_{22}\right)$$

$$\Rightarrow 4\pi^2 f^2 LC = \frac{\frac{L}{C} - R_1^2}{L - R_2^2} = \frac{L - CR_2^2}{L - CR_{12}^2}$$

$$\Rightarrow 4\pi^2 f^2 = \frac{1}{LC}\left(\frac{L - CR_2^2}{L - CR_{12}^2}\right)$$

$$\Rightarrow f^2 = \frac{1}{4\pi^2 LC}\left(\frac{L - CR_2^2}{L - CR_{12}^2}\right)$$

$$\Rightarrow f = \frac{1}{2\pi\sqrt{LC}}\sqrt{\left(\frac{L - CR_2^2}{L - CR_{12}^2}\right)}$$

$$\Rightarrow f = \frac{1}{2\pi}\left(\frac{L - CR_2}{L_2C - LC_{12}R_{22}}\right)$$

f is called Resonant frequency.

If $R^2 = 0$

Then $f = \frac{1}{2\pi}\sqrt{\frac{L - CR_1^2}{L^2C}}$

$$= \frac{1}{2\pi L}\sqrt{\frac{L - CR_1^2}{C}}$$

$$= \frac{1}{2\pi L}\sqrt{\frac{L}{C} - R_1^2}$$

$$= \frac{1}{2\pi}\sqrt{\frac{L}{L^2C} - \frac{R_1^2}{L^2}}$$

$$\boxed{f = \frac{1}{2\pi}\sqrt{\frac{L}{LC} - \frac{R_1^2}{L^2}}}$$

If R_1 and $R_2 = 0$, then

$$f = \frac{1}{2\pi}\sqrt{\frac{L}{L^2C}}$$

$$\boxed{f = \frac{1}{2\pi}\sqrt{\frac{1}{LC}} = \frac{1}{2\pi\sqrt{LC}}}$$

Comparison of Series and Parallel Resonant Circuit :→

Item	**Series ckt (R-L-C)**	**Parallel ckt (R– L and C)**
☙ Impedance at Resonance	Minimum	Maximum
☙ Current at Resonance	Maximum= $\frac{V}{R}$	Minimum= $\frac{V}{(L/CR)}$
☙ Effective Impedance	R	$\frac{L}{CR}$
☙ P.f. at Resonance	Unity	Unity
☙ Resonant Frequency	$\frac{1}{2\pi\sqrt{LC}}$	$\frac{1}{2\pi}\sqrt{\frac{1}{LC} - \frac{R^2}{L^2}}$

☙ It Magnifies	Voltage	Current
☙ Magnification factor	$\frac{WL}{R}$	$\frac{WL}{R}$

Parallel circuit :→

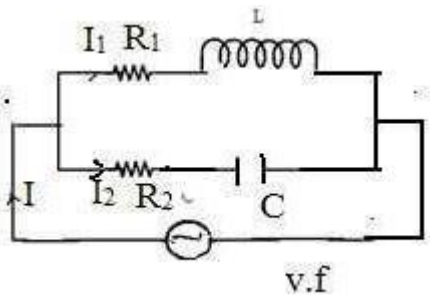

$$Z_1 = R_1 + jX_L = \sqrt{R_1^2 + X_L^2} \angle \phi_1$$

$$Z_2 = R_1 - jX_C = \sqrt{R2_1^2 + X_C^2} \angle -\phi_2$$

$$I_1 = \frac{V}{Z_1 \angle \phi_1} = \frac{V}{Z_1} \angle -\phi_1 = I_1 \angle -\phi_1$$

Where $\frac{V}{Z_1} = VY_1$

Here Y_1 → Admittance of the circuit

Admittance is defined as the reciprocal of impedence.

v

$$I_1 = VY_1 = \frac{}{R_1 + jX_L}$$

$$I^2 = \frac{V}{Z_{2\angle -\phi 2}} = \frac{V}{Z_{2\angle \phi_1}} = VY_2\angle\phi = I_2\angle\phi_2$$

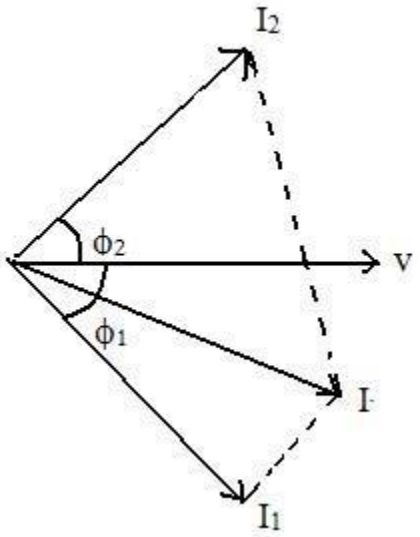

$$I = \sqrt{I_1^2 + I_2^2 + 2I_1I_2\cos(\phi_1 + \phi_2)}$$

$$I = I_1\angle -\phi_1 + I_2\angle\phi_2$$

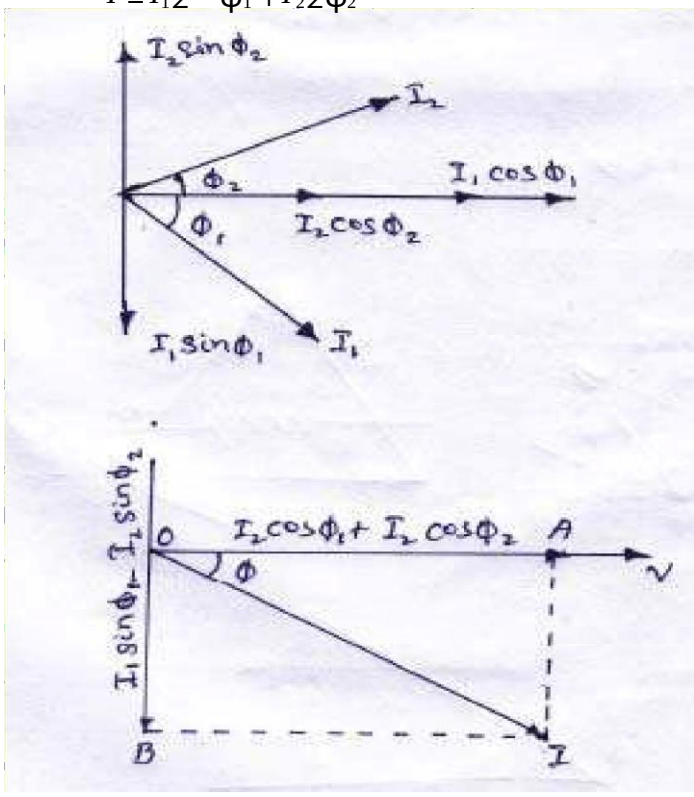

The resultant current "I" is the vector sum of the branch currents I_1 & I_2 can be found by using parallelogram low of vectors or resolving I_2 into their X –

and Y- components (or active and reactive components respectively) and then by combining these components.

Sum of active components of I_1 and I_2 = $I_1 \cos \phi_1 + I_2 \cos \phi_2$

Sum of the reactive components of I_1 and I_2 = $I_2 \sin \phi_2 - I_1 \sin \phi_1$

EXP – 01 :

A 60Hz voltage of 230 V effective value is impressed on an inductance of 0.265 H

(i) Write the time equation for the voltage and the resulting current. Let the zero axis of the voltage wave be at t = 0.

(ii) Show the voltage and current on a phasor diagram.

(iii) Find the maximum energy stored in the inductance.

Solution :-

$$V_{max} = \sqrt{2}V = \sqrt{2} \times 230V$$

f = 60Hz, $W = 2\pi f = 2\pi \times 60 = 377 rad/s$. $x_l = wl =$

$377 \times 0.265 = 100\Omega$.

(i) The time equation for voltage is $V(t) = 230\sqrt{2}\sin 377t$.

$I_{max} = V_{max} / x_l = 230\sqrt{2}/100. = 2.3\sqrt{3}$ $\phi = 90^o (lag)$.

Currente quation is.

$i(t) = 2.3\sqrt{2}\sin(377t - \pi/2)$

or $= 2.3\sqrt{2}\cos 377t$

(ii) Iti

(iii) or $E_{max} = \frac{1}{2} LI^2_{max} = \frac{1}{2} \times 0.265 \times (2.3\sqrt{2})^2 = 1.4J$

Example -02 :

The potential difference measured across a coil is 4.5 v, when it carries a direct current of 9 A. The same coil when carries an alternating current of 9A at 25 Hz, the potential difference is 24 v. Find the power and the power factor when it is supplied by 50 v, 50 Hz supply.

Solution :

Let R be the d.c. resistance and L be inductance of the coil.

$$R = V / I = 4.5/9 = 0.5\Omega$$

With a.c. current of 25Hz, z = V/1.

$$\frac{24}{9} = 2.66\Omega$$

$$x_l = \sqrt{Z^2 - R^2} = \sqrt{2.66^2 - 0.5^2}$$

$$= 2.62\Omega$$

$$x_l = 2\pi \times 25 \times L$$

$$x_l = 0.0167\Omega$$

At 50Hz

$$x_l = 2.62 \times 2 = 5.24\Omega$$

$$Z = \sqrt{0.5^2 + 5.24^2}$$

$$= 5.06\ \Omega$$

I = 50/5.26 = 9.5 A

P = $I^2/R = 9.5^2 \times 0.5$ = 45 watt.

Example – 03 :

A 50- μf capacitor is connected across a 230-v, 50 – Hz supply. Calculate

(a) The reactance offered by the capacitor.

(b) The maximum current and

(c) The r.m.s value of the current drawn by the capacitor.

Solution :

(a) $x_l = \quad = \frac{1}{wc} = \frac{1}{2\pi\ fe} = \frac{1}{2\pi \times 50 \times 50 \times 10^{-6}} = 63.6\Omega$

(c) Since 230 v represents the r.m.s value

$I_{rms} = 230/\ x_l = 230/63.6 = 3.62A$

(b) $I_m = I_{r.m.s} \times \sqrt{2} = 3.62 \times \sqrt{2} = 5.11A$

Example – 04 :

In a particular R – L series circuit a voltage of 10v at 50 Hz produces a current of 700 mA. What are the values of R and L in the circuit ? **Solution :**

(i) $Z = \sqrt{R^2 + (2\pi \times 50L)^2}$

$= \sqrt{R^2 + 98696L^2}$

$V = 1z$

$10 = 700 \times 10^{-3}\sqrt{(R^2 + 98696L^2)}$

$\sqrt{(R^2 + 98696L^2)} = 10/\ 700 \times 10^{-3} = 100/\ 7$

$R^2 + 98696L^2 = 10000/49$---------- (I)

(ii) In the second case $Z = \sqrt{R^2 + (2\pi \times 75L)^2}$

$\square 10 = 500 \times 10^{-3}\sqrt{R^2 + 222066L^2}) = 20$

$\sqrt{R^2 + 222066L^2}) = 20$

CHAPTER-07
TRANSIENTS

Whenever a network containing energy storage elements such as inductor or capacitor is switched from one condition to another,either by change in applied source or change in network elements,the response current and voltage change from one state to the other state.The time taken to change from an initial steady state to the final steady state is known as the *transient period*.This response is known as *transient response* or *transients.*The response of the network after it attains a final steady value is independent of time and is called the steady-state response.The complete response of the network is determined with the help of a differential equation.

STEADY STATE AND TRANSIENT RESPONSE

In a network containing energy storage elements, with change in excitation, the currents and voltages in the circuit change from one state to other state. The behaviour of the voltage or current when it is changed from one state to another is called the transient state. The time taken for the circuit to change from one steady state to another steady state is called the transient time. The application of KVL and KCL to circuits containing energy storage elements results in differential, rather than algebraic equations. when we consider a circuit containing storage elements which are independent of the sources, the response depends upon the nature of the circuit and is called natural response. Storage elements deliver their energy to the resistances. Hence, the response changes, gets saturated after some time,and is referred to as the transient response. When we consider a source acting on a circuit, the response depends on the nature of the source or sources.This response is called forced response. In other words,the complete response of a circuit consists of two parts; the forced response and the transient response. When we consider a differential equation, the complete solution consists of two parts: the complementary function and the particular solution. The complementary function dies out after short interval, and is referred to as the transient response or source free response. The particular solution is the steady state response, or the forced response. The first step in finding the complete solution of a circuit is to form a differential equation for the circuit. By obtaining the differential equation, several methods can be used to find out the complete solution.

DC RESPONSE OF AN R-L CIRCUIT

Consider a circuit consisting of a resistance and inductance as shown in figure.The inductor in the circuit is initially uncharged and is in series with the resistor.When the switch S is closed ,we can find the complete solution for the current.Application of kirchoff's voltage law to the circuit results in the following differential equation.

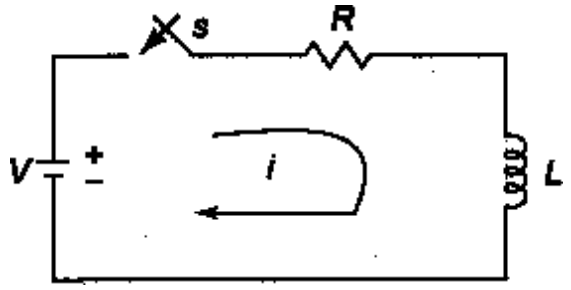
s
R
V
+
−
i
L

Figure 1.1

$V = Ri + L\frac{di}{dt}$ 1.1

Or $\frac{di}{dt} + \frac{R}{L} i = \frac{V}{L}$ 1.2

In the above equation , the current I is the solution to be found and V is the applied constant voltage. The voltage V is applied to the circuit only when the switch S is closed. The above equation is a linear differential equation of first order.comparing it with a non-homogenious differential equation

$\frac{dx}{dt} + P x = K$ 1.3

whose solution is

$X = e^{-Pt} \int K e^{+Pt} dt + c\, e^{-Pt}$ 1.4

Where c is an arbitrary constant. In a similar way , we can write the current equation as

$$i = c\, e^{-\left(\frac{R}{L}\right)t} + e^{-\left(\frac{R}{L}\right)t} \int \frac{V}{L} e^{\left(\frac{R}{L}\right)t} dt$$

Hence , $i = c\, e^{-\left(\frac{R}{L}\right)t} + \frac{V}{R}$ 1.5

To determine the value of c in equation c , we use the initial conditions .In the circuit shown in Fig.1.1, the switch s is closed at t=0.at t=0-,i.e. just before closing the switch s , the current in the inductor is zero. Since the inductor does not allow sudden changes in currents, at t=o+ just after the switch is closed,the current remains zero.

Thus at t = 0, i =0

Substituting the above condition in equation c , we have

$$0 = c + \frac{V}{R}$$

Substituting the value of c in equation c , we get

$$i = \frac{V}{R} - \frac{V}{R} e^{\frac{-Rt}{L}}$$

$$i = \frac{V}{R} \left(1 - e^{\frac{-Rt}{L}}\right)$$

$i = I_o \left(1 - e^{\frac{-Rt}{L}}\right)$ (where $I_o = \frac{V}{R}$)

$i = I_o \left(1 - e^{\frac{-t}{\tau}}\right)$ (where $\tau = Time\ constant = \frac{L}{R}$) 1.6

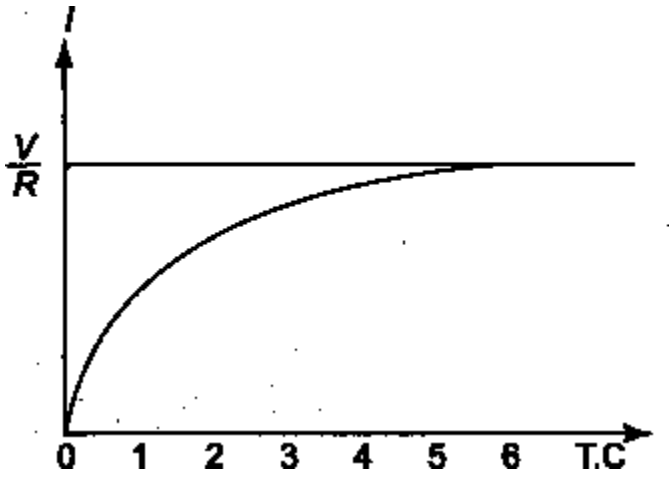

Figure 1.2

Equation d consists of two parts, the steady state part (I_o =V/R) and the transient part $I_o e^{\frac{-Rt}{L}}$.

When switch S is closed , the response reaches a steady state value after a time interval as shown in figure 1.2.

Here the transition period is defined as the time taken for the current to reach its final or stedy state value from its initial value.In the transient part of the solution, the quantity L/R is important in describing the curve since L/R is the time period required for the current to reach its initial value of zero to the final value I_o =V/R. The time constant of a function $I_o e^{\frac{-Rt}{L}}$ is the time at which the exponent of e is unity, where e is the base of the natural logarithms.The term L/R is called the time constant and is denoted by τ .

So, $\tau = \frac{L}{R}$ sec

Hence, the transient part of the solution is

$$i = -\frac{V}{R} e^{\frac{-Rt}{L}} = \frac{V}{R} e^{\frac{-t}{\tau}}$$

At one Time constant , the transient term reaches 36.8 percent of its initial value.

$$i(\tau) = -\frac{V}{R} e^{\frac{-t}{\tau}} = -\frac{V}{R} e^{-1} = -0.368 \frac{V}{R}$$

Similarly,

$$i(2\tau) = -\frac{V}{R} e^{-2} = -0.135 \frac{V}{R}$$

$$i(3\tau) = -\frac{V}{R} e^{-3} = -\frac{V}{R}$$

0.0498

$i(5\tau) = -\frac{V}{R}e^{-5} = -$ [illegible]
0.0067

After 5 TC the transient part reaches more than 99 percent of its final value.

In figure A we can find out the voltages and powers across each element by using the current.

Voltage across the resistor is

$$v_R = R\,i = R \times \frac{V}{R}\left(1 - e^{\frac{-Rt}{L}}\right)$$

Hence, $v_R = V\left(1 - e^{\frac{-Rt}{L}}\right)$

Similarly, the voltage across the inductance is

$$v_L = L\frac{di}{dt} = L\frac{V}{R} \times \frac{R}{L}\, e^{\frac{-Rt}{L}} = V\, e^{\frac{-Rt}{L}}$$

The responses are shown in Figure 1.3.

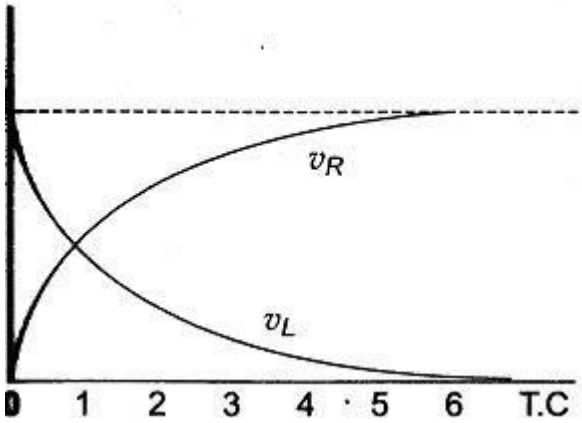

Figure 1.3

Power in the resistor is

$$P_R = v_R\, i = V\left(1 - e^{\frac{-Rt}{L}}\right)\left(1 - e^{\frac{-Rt}{L}}\right) \times \frac{V}{R}$$

$$= \frac{V^2}{R}\left(1 - 2e^{\frac{-Rt}{L}}\right) + e^{\frac{-2Rt}{L}}$$

Power in the inductor is

$$P_L = v_L\, i = V\, e^{\frac{-Rt}{L}} \times \frac{V}{R}\left(1 - e^{\frac{-Rt}{L}}\right)$$

$$= \frac{V^2}{R}\left(e^{\frac{-Rt}{L}} - e^{\frac{-2Rt}{L}}\right)$$

The responses are shown in figure 1.4 .

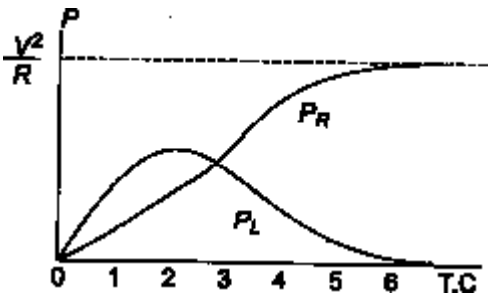

Figure 1.4

Problem : 1.1

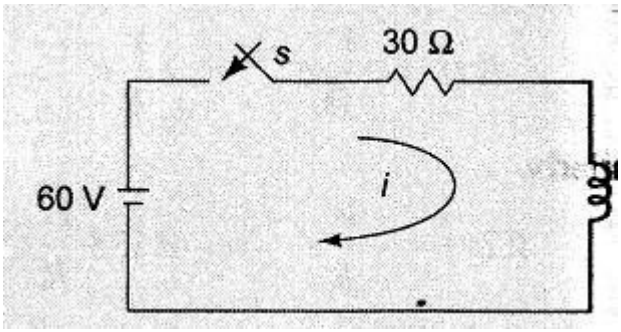

Figure 1.5

A series R-L circuit with R = 30Ω and L = 15 H has a constant voltage V = 50 V applied at t=0 as shown in Fig. 1.5 . determine the current i, the voltage across resistor and across inductor.

Solution :

By applying Kirchoff's voltage Law, we get

$$15\frac{di}{dt} + 30i = 60$$

$$\Rightarrow \frac{di}{dt} + 2i = 4$$

The general solution for a linear differential equation is

$$i = c e^{-pt} + e^{-pt}\int K e^{pt} dt$$

where P=2,K=4

putting the values

$i=ce^{-2t} + e^{-2t}\int 4e^{2t}dt$

$\Rightarrow$ $i=ce^{-2t} + 2$

At t=0, the switch s is closed.

Since the inductor never allows sudden change in currents. At $t=0^{+}$ the current in the circuit is zero. Therefore at $t=0^{+}$, i =0

$\Rightarrow$ 0=c + 2

$\Rightarrow$ c =- 2

Substituting the value of c in the current equation, we have

$i=2(1- e^{-2t})$ A voltage across resistor () =iR =2(1-) x

30=60(1-) v V_R e^{-2t} e^{-2t}

voltage across inductor ($V_l) = L\frac{di}{dt} = 15 \times \frac{d}{dt}2(1- e^{-2t}) = 30\times 2e^{-2t}$ v= $60e^{-2t}$

DC RESPONSE OF AN R-C CIRCUIT

Consider a circuit consisting of a resistance and capacitance as shown in figure.The capacitor in the circuit is initially uncharged and is in series with the resistor.When the switch S is closed at t=0 , we can find the complete solution for the current.Application of kirchoff's voltage law to the circuit results in the following differential equation.

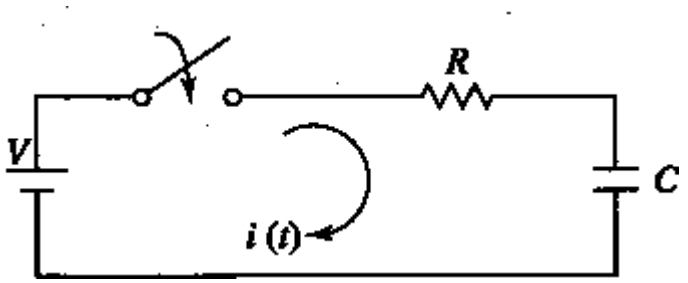

Figure 1.6

$V = Ri + \frac{1}{C}\int i\,dt$ 1.7

By differentiating the above equation, we get

$$0 = R\frac{di}{dt} \quad \frac{i}{C} + i \text{.....} 1.8$$

Or

$$\frac{di}{dt} + \frac{1}{RC} i = 0 \text{.....} 1.9$$

Equation c is a linear differential equation with only the complementary function. The particular solution for the above equation is zero. The solution for this type of differential equation is

$$i = c\, e^{-\left(\frac{t}{RC}\right)} \text{.....} 1.10$$

To determine the value of c in equation c , we use the initial conditions .In the circuit shown in Fig. the switch s is closed at t=0. Since the capacitor does not allow sudden changes in voltage, it will act as a short circuit at t=o+ just after the switch is closed.

So the current in the circuit at t = 0+ is $\frac{V}{R}$

Thus at t = 0, the current i = $\frac{V}{R}$

Substituting the above condition in equation c , we have

$$\frac{V}{R} = c$$

Substituting the value of c in equation c , we get

$$i = \frac{V}{R}\, e^{-\left(\frac{t}{RC}\right)} \text{.....} 1.11$$

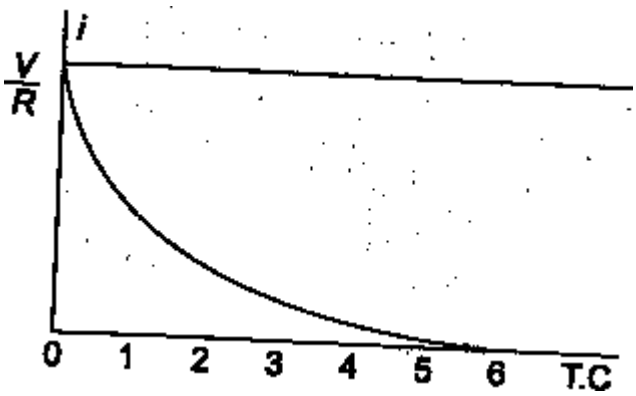

Figure 1.7

When switch S is closed , the response decays as shown in figurre.

The term RC is called the time constant and is denoted by τ .

So, τ = RC sec

After 5 TC the curve reaches 99 percent of its final value.

In figure A we can find out the voltage across each element by using the current equation.

Voltage across the resistor is

$$v_R = R\,i = R \times \frac{V}{R} e^{\frac{-t}{RC}}$$

Hence , $v_R = V e^{\frac{-t}{RC}}$

Similarly, voltage across the capacitor is

$$v_C = \frac{1}{C}\int i\, dt$$

$$= \frac{1}{C}\int \frac{V}{R} e^{\frac{-t}{RC}}\, dt$$

$$\left(\frac{V}{RC} \times RC\, e^{\frac{-t}{RC}}\right) \quad = - \quad + c$$

$$= - V e^{\frac{-t}{RC}} + c$$

At t=0,voltage across capacitor is zero

So, c = V

And

$$V_C = V\left(1 - e^{\frac{-t}{RC}}\right)$$

The responses are shown in Figure1.8.

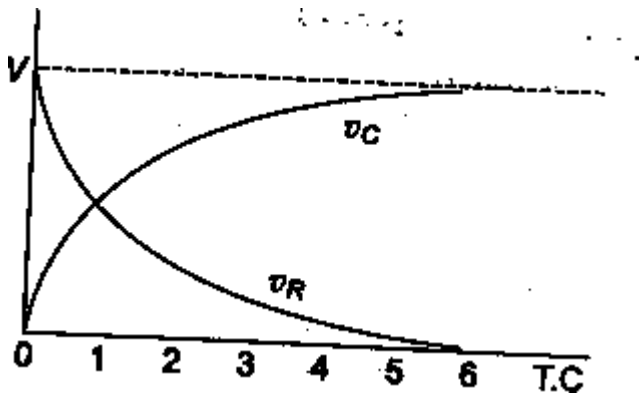

Figure 1.8

Power in the resistor is

$$P_R = v_R\, i = V e^{\frac{-t}{RC}} \times \frac{V}{R} e^{\frac{-t}{RC}}$$

$$= \frac{V^2}{R} e^{\frac{-2t}{RC}}$$

Power in the capacitor is

$P_C = v_C\, i = V\,(1-e^{\frac{-t}{RC}})\,\frac{V}{R}\,e^{\frac{-t}{RC}}$

$= \frac{V^2}{R}\,(e^{\frac{-t}{RC}} - e^{\frac{-2t}{RC}})$

The responses are shown in figure 1.9.

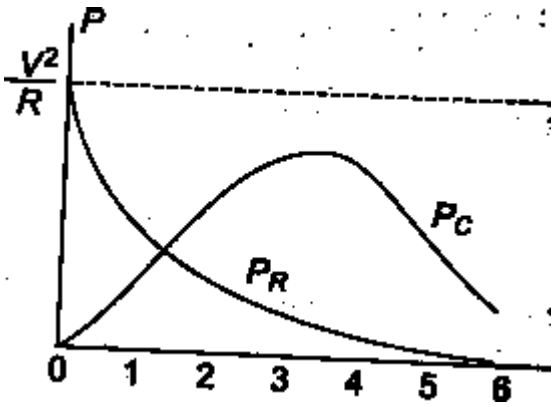

Figure 1.9

Problem : 1.2

A series R-C circuit with R = 10Ω and C =0.1 F has a constant voltage V = 20 V applied at t=0 as shown in Fig. determine the current i, the voltage across resistor and across capacitor.

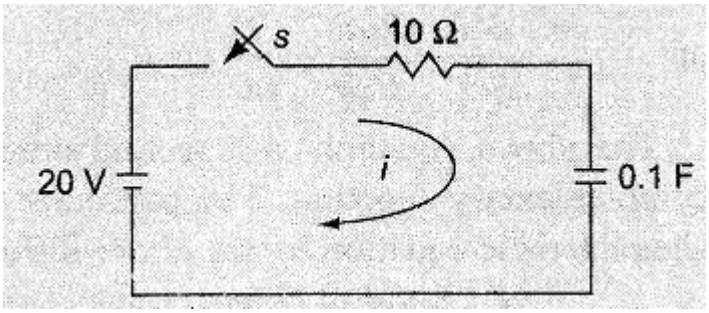

Figure 1.10

Solution :

By applying Kirchoff's voltage Law, we get

$10i + \frac{1}{0.1}\int i\,dt = 20$

Differentiating w.r.t. t we get

$10\frac{di}{dt} + \frac{i}{0.1} = 0$

$=> \frac{di}{dt} + i = 0$

The solution for above equation is

$i = ce^{-t}$

At t=0, the switch s is closed.

Since the capacitor never allows sudden change in voltages. At $t=0^+$ the current in the circuit is i = V/R=20/10 =2 A

. Therefore at t= 0, i =2 A

the current equation is $i=2e^{-t}$ voltage across

resistor (V_R) =iR =2 e^{-t} x 10=20 e^{-t} v

voltage across capacitor (V_c) = $V(1 - e^{\frac{-t}{RC}})$= 20(1- e^{-t}) V

DC RESPONSE OF AN R-L-C CIRCUIT

Consider a circuit consisting of a resistance, inductance and capacitance as shown in figure.The capacitor and inductor in the circuit is initially uncharged and are in series with the resistor.When the switch S is closed at t=0 , we can find the complete solution for the current.Application of kirchoff's voltage law to the circuit results in the following differential equation.

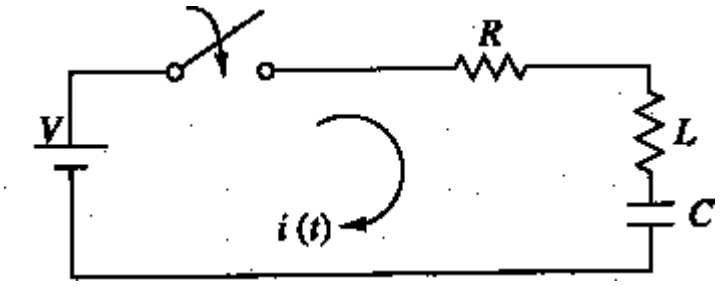

Figure 1.11

$V = Ri + L\frac{di}{dt} + \frac{1}{C}\int i\,dt$ 1.12

By differentiating the above equation, we get

$0 = R\frac{di}{dt} + L\,d^2i/dt^2 + \frac{i}{C}$ i =.....1.13

Or

$d^2i/dt^2 + \frac{R}{L}\frac{di}{dt} + \frac{1}{LC}i = 0$ 1.14

The above equation c is a second order linear differential equation with only the complementary function. The particular solution for the above equation is zero. The characteristics equation for this type of differential equation is

$D^2 + \frac{R}{L}D + \frac{1}{LC} = 0$ 1.15

The roots of equation 1.15 are

$$D_1, D_2 = -\frac{R}{2L} \pm \sqrt{\left(\frac{R}{2L}\right)^2 - \frac{1}{LC}}$$

By assuming $K_1 = -\frac{R}{2L}$ and $K_2 = \sqrt{\left(\frac{R}{2L}\right)^2 - \frac{1}{LC}}$

$D_1 = K_1 + K_2$ and $D_2 = K_1 - K_2$

Here K_2 may be positive,negative or zero .

Case I : K_2 *is Positive* $\left(\frac{R}{2L}\right)^2 > \frac{1}{LC}$

Then , the roots are Real and Unequal and give an over damped Response as shown in figure 1.12.

The solution for the above equation is : $i = C_1 e^{(K_1+K_2)t} + C_2 e^{(K_1-K_2)t}$

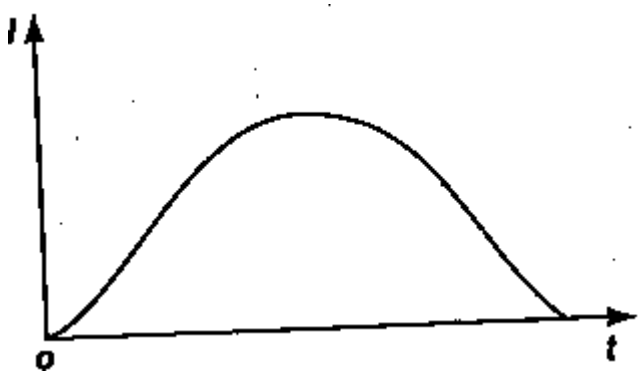

Figure 1.12

Case II : K_2 *is Negative* $\left(\frac{R}{2L}\right)^2 < \frac{1}{LC}$

Then , the roots are Complex Conjugate, and give an under-damped Response as shown in figure 1.13.

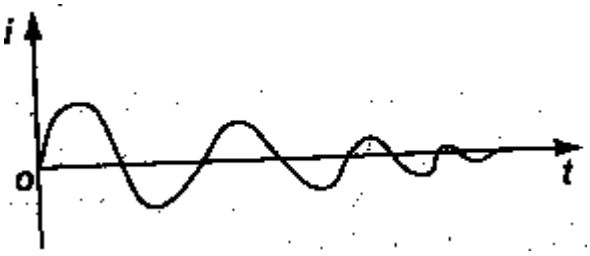

Figure 1.13

The solution for the above equation is : i = $e^{K_1 t}(C_1 \cos K_2 t + C_2 \sin K_2 t)$

Case III : K_2 is Zero $\left(\frac{R}{2L}\right)^2 = \frac{1}{LC}$

Then , the roots are Equal and give an Critically-damped Response as shown in figure 1.14.

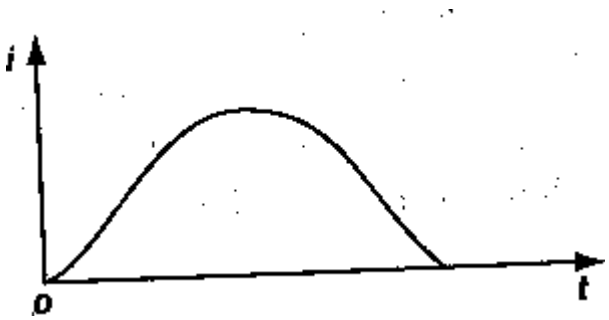

Figure 1.14

The solution for the above equation is : i = $e^{K_1 t}(C_1 + C_2 t)$

Problem : 1.3

A series R-L-C circuit with R = 20Ω , L = 0.05H and C = 20 μF has a constant voltage V = 100 V applied at t=0 as shown in Fig. determine the transient current i .

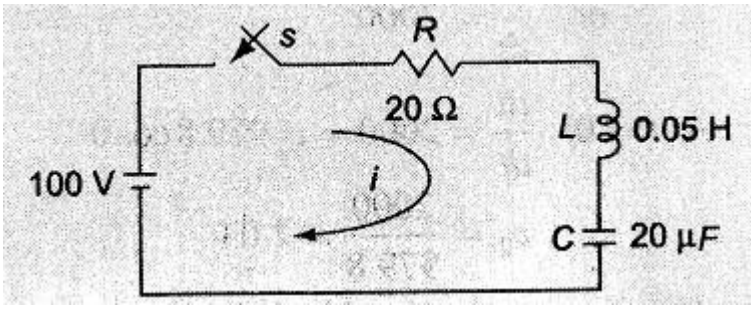

Figure 1.15

Solution :

By applying Kirchoff's voltage Law, we get

$100=30i+0.05\frac{di}{dt}+\frac{1}{20\times10^{-6}}\int i\,dt$

Differentiating w.r.t. t we get

$0.05d^2i/dt^2+20\frac{di}{dt}+\frac{1}{20\times10^{-6}}i=0$

$\Rightarrow d^2i/dt^2+400\frac{di}{dt}+10^6 i=0$

$\Rightarrow (D^2+400D+10^6)i=0$

The roots of equation are

$D_1, D_2 = -\frac{400}{2}\pm\sqrt{\left(\frac{400}{2}\right)^2-10^6}$

$= -200\pm\sqrt{(200)^2-10^6}$

$D_1 = -200+j979.8$

$D_2 = -200-j979.8$

Therefore the current

$i = e^{+K_1t}[C_1\cos K_2t+C_2\cos K_2t]$

$i = e^{-200t}[C_1\cos 979.8t+C_2\sin 979.8t]$ A

At t=0, the switch s is closed.

Since the inductor never allows sudden change in currents. At t=0^+ the current in the circuit is zero. Therefore at t=0^+, i =0

$\Rightarrow i=0=(1)[C_1\cos 0+C_2\sin 0]$

$\Rightarrow C_1=0$ and $i=e^{-200t}[C_2\sin 979.8t]$ A

Differentiating w.r.t. t we get

$\frac{di}{dt}=C_2[e^{-200t}979.8\cos 979.8t+e^{-200t}(-200)\sin 979.8t]$

At t=0, the voltage across the inductor is 100 V

$\Rightarrow L\frac{di}{dt}=100$ or $\frac{di}{dt}=2000$

At t=0, $\frac{di}{dt}=2000=C_2 979.8\cos 0$

$\Rightarrow C_2 = \frac{2000}{979.8} = 2.04$

The current equation is

$i = e^{-200t}(2.04 \sin 979.8t)\ A$

ANALYSIS OF CIRCUITS USING LAPLACE TRANSFORM TECHNIQUE

The Laplace transform is a powerful Analytical Technique that is widely used to study the behavior of Linear,Lumped parameter circuits. Laplace Transform converts a time domain function f(t) to a frequency domain function F(s) and also Inverse Laplace transformation converts the frequency domain function F(s) back to a time domain function f(t).

$L\{f(t)\} = F(s) = \int_{-\infty}^{\infty} e^{-st} f(t)\, dt$ ..... LT 1

$L^{-1}\{F(s)\} = f(t) = \frac{1}{2\pi j}\int_{-j}^{+j} F(s)\, e^{st}\, ds$ ..... LT 2

DC RESPONSE OF AN R-L CIRCUIT (LT Method)

Let us determine the solution i of the first order differential equation given by equation A which is for the DC response of a R-L Circuit under the zero initial condition i.e. current is zero, i=0 at $t=0^-$ and hence i=0 at $t=0^+$ in the circuit in figure A by the property of Inductance not allowing the current to change as switch is closed at t=0.

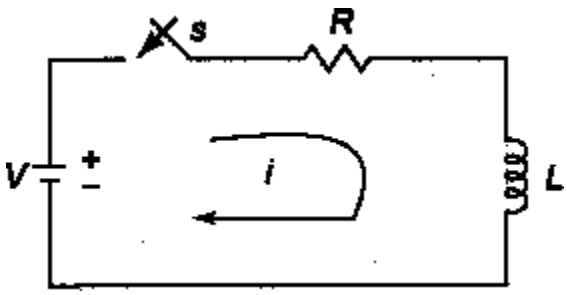

Figure LT 1.1

$V = Ri + L\frac{di}{dt}$ .....LT 1.1

Taking the Laplace Transform of bothe sides we get,

$\frac{V}{s} = R\,I(s) + L\,[\,s\,I(s) - I(0)\,]$ .....LT 1.2

$\Rightarrow \frac{V}{s}$ =R I(s) + L [s I(s)] (I(0) =0 : zero initial current)

$\Rightarrow \frac{V}{s}$ = I(s)[R +L s]

$\Rightarrow$ I(s) = $\frac{V}{s[R+Ls]}$ ..... LT 1.3

Taking the Laplace Inverse Transform of both sides we get,

$\Rightarrow L^{-1}\{I(s)\} = i(t) = L^{-1}\{\frac{V}{s[R+Ls]}\}$

i(t) = $L^{-1}\{\frac{V/L}{s[R/L+s]}\}$ (Dividing the numerator and denominator by L) putting

$\propto = R/L$ we get

i(t) = $L^{-1}\{\frac{V/L}{s[s+\propto]}\} = L^{-1}\{\frac{V}{L}(\frac{1}{s} - \frac{1}{(s+\propto)})\frac{1}{\propto}\}$

i(t) = $L^{-1}\{\frac{V}{L}(\frac{1}{s} - \frac{1}{(s+R/L)})\frac{L}{R}\}$ (again putting back the value of $\propto$)

i(t) = $L^{-1}\{\frac{V}{R}(\frac{1}{s} - \frac{1}{(s+R/L)})\} = \frac{V}{R}(1 - e^{\frac{-Rt}{L}}) = I_o(1 - e^{\frac{-Rt}{L}})$ (where $I_o = \frac{V}{R}$)

i(t)= $I_o(1 - e^{\frac{-t}{\tau}})$ (where $\tau = Time\ constant = \frac{L}{R}$) ..... LT 1.4

It can be observed that solution for i(t) as obtained by Laplace Transform technique is same as that obtained by standard differential method .

DC RESPONSE OF AN R-C CIRCUIT(L.T.Method)

Similarly ,

Let us determine the solution i of the first order differential equation given by equation A which is for the DC response of a R-C Circuit under the zero initial condition i.e. voltage across capacitor is zero, V_{0^-} =0 at t= and hence V_{0^+} =0 at t= in the circuit in figure A by the property of capacitance not allowing the voltage across it to change as switch is closed at t=0.

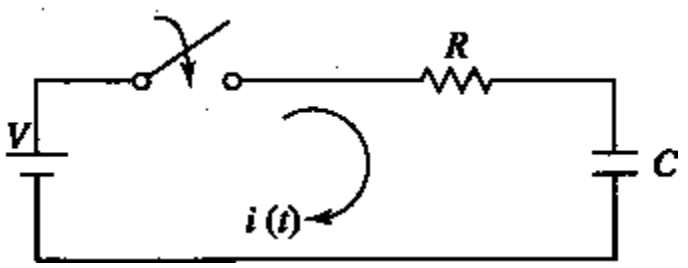

Figure LT 1.2

V = Ri + $\frac{1}{C}\int i\,dt$ .....LT 1.5

Taking the Laplace Transform of both sides we get,

$$\frac{V}{s} = R\,I(s) + \left[\frac{1}{C}\,\frac{I(s)}{s} + I(0)\right] \quad \text{.....LT 1.6}$$

$$\Rightarrow \frac{V}{s} = R\,I(s) + \left[\frac{1}{C}\,\frac{I(s)}{s}\right] \qquad (\,I(0) = 0 : \text{zero initial charge}\,)$$

$$\Rightarrow \frac{V}{s} = I(s)\left[R + \frac{1}{Cs}\right] = I(s)\left[\frac{RCs+1}{Cs}\right]$$

$$\Rightarrow I(s) = \frac{V}{s}\left[\frac{Cs}{(RCs+1)}\right] = \frac{VC}{(RCs+1)}\left[\text{.....LT 1.7}\right.$$

Taking the Laplace Inverse Transform of both sides we get,

$$\Rightarrow L^{-1}\{I(s)\} = i(t) = L^{-1}\left\{\frac{VC}{(RCs+1)}\right\}$$

$$i(t) = L^{-1}\left\{\frac{\frac{VC}{RC}}{\left[s+\frac{1}{RC}\right]}\right\} \quad (\text{ Dividing the numerator and denominator by RC })$$

putting $\propto = \frac{1}{RC}$ we get

$$i(t) = L^{-1}\left\{\frac{V/R}{[s+\propto]}\right\} = \frac{V}{R}\,e^{-\propto t}$$

$$i(t) = \frac{V}{R}\,e^{\frac{-t}{RC}} \quad (\text{ putting back the value of } \propto)$$

$$i(t) = I_o\,e^{\frac{-t}{RC}} \quad (\text{where } I_o = \frac{V}{R}) \quad \text{.....LT 1.8}$$

$$i(t) = I_o\,e^{\frac{-t}{\tau}} \quad (\text{ where } \tau = Time\ constant = \text{RC})$$

It can be observed that solution for i(t) as obtained by Laplace Transform technique in q is same as that obtained by standard differential method in d.

DC RESPONSE OF AN R-L-C CIRCUIT (L.T. Method)

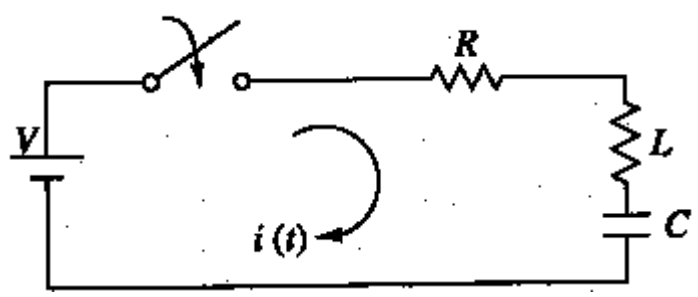

Figure LT 1.3

Similarly ,

Let us determine the solution i of the first order differential equation given by equation A which is for the DC response of a R-L-C Circuit under the zero initial condition i.e. the switch s is closed at t=0.at t=0-,i.e. just before closing the switch s , the current in the inductor is zero. Since the inductor does not allow sudden changes in currents, at t=o+ just after the switch is closed,the current remains zero. also the voltage across capacitor is zero i.e. V_c =0 at t=0^- and hence V_c =0 at t=0^+ in the circuit in figure by the property of capacitance not allowing the voltage across it V_c to suddenly change as switch is closed at t=0.

V = Ri + L$\frac{di}{dt}$ + $\frac{1}{C}\int i\, dt$ .....LT 1.9

Taking the Laplace Transform of both sides we get,

$\frac{V}{s}$=R I(s) ++ L [s I(s) –I(0)]+ [$\frac{1}{C}$ $\frac{I(s)}{s}$ +I (0)]..... LT 1.10

=> $\frac{V}{s}$ =R I(s) + L [s I(s)] + $\frac{1}{C}$ [$\frac{I(s)}{s}$] ($I(0) = 0$: zero initial current & I(0) =0 : zero initial charge)

=> $\frac{V}{s}$ = I(s)[R +Ls + $\frac{1}{Cs}$] = I(s)[$\frac{LCs^2+Rcs+1}{Cs}$]

=> I(s) = $\frac{V}{s}$ [$\frac{Cs}{(LCs^2+RCs+1)}$] = $\frac{VC}{(LCs^2+RCs+1)}$ .....LT 1.11

Taking the Laplace Inverse Transform of both sides we get,

=> L^{-1}[I(s)} = $i(t) = L^{-1}\{\frac{VC}{(LCs^2+RCs+1)}\}$

i(t) = $L^{-1}\{\frac{\frac{VC}{LC}}{[s^2+s\frac{R}{L}+\frac{1}{LC}]}\}$ (Dividing the numerator and denominator by LC)

i(t) = $L^{-1}\{\frac{\frac{V}{L}}{[s^2+s\frac{R}{L}+\frac{1}{LC}]}\}$

$\alpha = \frac{R}{2L}$ and $\omega = \sqrt{\frac{1}{LC}}$ putting we get

i(t) = $L^{-1}\{\frac{\frac{V}{L}}{[s^2+2\alpha s+\omega^2]}\}$

The denominator polynomial becomes = $[s^2 + 2\alpha s + \omega^2]$

$s_1, s_2 = \frac{-2\alpha \pm \sqrt{4\alpha^2-4\omega^2}}{2} = -\alpha \pm \sqrt{\alpha^2-\omega^2} = -\alpha \pm \beta$ where,

$\alpha = \frac{R}{2L}$; $\omega = \sqrt{\frac{1}{LC}}$ and $\beta = \sqrt{\alpha^2-\omega^2}$ where,

By partial Fraction expansion , of I(s) ,

$$I(s) = \frac{A}{s-s_1} + \frac{B}{s-s_2}$$

A = $(s - s_1)\, I(s)]_{s=s_1}$

$$= \frac{\frac{V}{L}}{(s_1 - s_2)}$$

B = $(s - s_2)\, I(s)]_{s=s_2}$

$$= \frac{\frac{V}{L}}{(s_1 - s_2)} = -\frac{\frac{V}{L}}{(s_1 - s_2)}$$

$$= \frac{\frac{V}{L}}{(s_1 - s_2)}\left(\frac{1}{(s - s_1)} - \frac{1}{(s - s_2)}\right)$$

I(s)

Taking the Inverse Laplace Transform

$$i(t) = A_1 e^{s_1 t} + A_2 e^{s_2 t}$$

Where A_1 and are constants to be determined and s_1 and s_2 aren the roots of the equation.

Now depending upon the values of s_1 and s_2, we have three cases of the response.

CASE I : When the roots are Real and Unequal, it gives an over-damped response.

$\frac{R}{2L} > \sqrt{\frac{1}{LC}}$ or $\alpha > \omega$; In this case, the solution is given by

$$i(t) = e^{-\alpha t}(A_1 e^{\beta t} + A_2 e^{-\beta t}) \text{.....LT 1.12}$$

or $i(t) = A_1 e^{s_1 t} + A_2 e^{s_2 t}$ for $t \geq 0$

CASE II : When the roots are Real and Equal, it gives an Critically-damped response.

$\frac{R}{2L} = \sqrt{\frac{1}{LC}}$ or $\alpha = \omega$; In this case, the solution is given by

or

$i(t) = e^{-\alpha t}(A_1 + A_2 t)$ for $t \geq 0$ .....LT 1.13

CASE III : When the roots are Complex Conjugate, it gives an under-damped response.

$\frac{R}{2L} < \sqrt{\frac{1}{LC}}$ or $\alpha < \omega$; In this case, the solution is given by

$i(t) = A_1 e^{s_1 t} + A_2 e^{s_2 t}$ for $t > 0$

$s_1, s_2 = \frac{-2\alpha \pm \sqrt{4\alpha^2 - 4\omega^2}}{2} = -\alpha \pm \sqrt{\alpha^2 - \omega^2}$ where,

$\sqrt{\alpha^2 - \omega^2} = \sqrt{-1}\sqrt{\omega^2 - \alpha^2} = j\,\omega_d$ Let where $j = \sqrt{-1}$ and $\omega_d = \sqrt{\omega^2 - \alpha^2}$

Hence , $i(t) = e^{-\alpha t}(A_1 \ e^{j\omega_d t} + A_2 \, e^{-j\omega_d t})$

$$i(t) = e^{-\alpha t} \left[(A_1 + A_2) \left\{ \frac{e^{j\omega_d t} + e^{-j\omega_d t}}{2} \right\} + j(A_1 - A_2) \left\{ \frac{e^{j\omega_d t} - e^{-j\omega_d t}}{2j} \right\} \right]$$

$$i(t) = e^{-\alpha t} \ [(A_1 + A_2) \cos\omega_d t \ + j \ (A_1 - A_2) \sin \omega_d t \ ]$$

$i(t) = e^{-\alpha t}(B_1 \cos\omega_d t \ + B_2 \sin \omega_d t)$ ……………………………….LT 1.14

,,,XXXXXXXXXXXXXXXXX,,,

CHAPTER 8

TWO-PORT NETWORKS

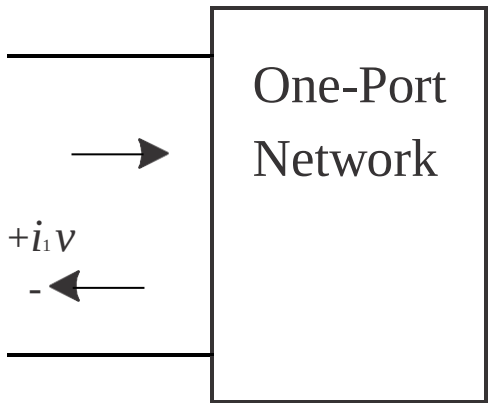

a) **One port network** is a two terminal electrical network in which, current enters through one terminal and leaves through another terminal. Resistors, inductors and capacitors are the examples of one port network because each one has two terminals. One port network representation is shown in the following figure.
b) A pair of terminals at which a signal (voltage or current) may enter or leave is called a port.
c) A network having only one such pair of terminals is called a one-port network.
d) No connections may be made to any other nodes internal to the network.
e) By KCL, we therefore have $i_1 = i_1$

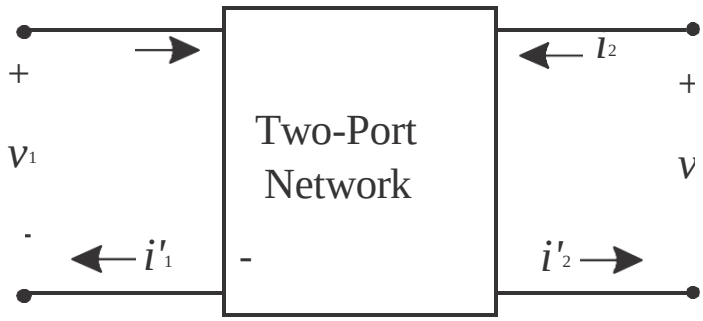

- **two port network** is a pair of two terminal electrical network in which, current enters through one terminal and leaves through another terminal of each port. Two port network representation is shown in the following figure. Type equation here.
- Two-port networks are used to describe the relationship between a pair of terminals
- The analysis methods we will discuss require the following conditions be met

  1. Linearity
  2. No independent sources inside the network
  3. No stored energy inside the network (zero initial conditions)
  4. $i_1 = i_1$ and $i_2 = i$

72

74

Two Port Network Parameters

There are various parameters needed to analyze a two port network. For examples, Z parameters, Y parameters, h parameters, g parameters, ABCD parameters etc.
Let us discuss these network parameters one by one to gain a better understanding of their application and uses.

Impedance Parameters

- Suppose the currents and voltages can be measured.
- Alternatively, if the circuit in the box is known, V_1 and V_2 can be calculated based on circuit analysis.
- Relationship can be written in terms of the impedance parameters.
- We can also calculate the impedance parameters after making two sets of measurements.

$$V_1 = z_{11} I_1 + z_{12} I_2$$

$$V_2 = z_{21} I_1 + z_{22} I_2$$

If the right port is an open circuit ($I_2=0$), then we can easily solve for two of the impedance parameters: Similarly by open circuiting left hand port ($I_{1=0}$) we can solve for the other two parameters.

2

$$Z_{11} = inputimpedence = \frac{V_1}{I_1}\Big|_{I_2=0} \qquad Z_{21} = forwardtransferimpedence = \frac{V_2}{I_1}\Big|_{I_2=0}$$

$$Z_{12} = reversetransferimpedence = \frac{V_1}{I_2}\Big|_{I_1=0} \qquad Z_{22} = outputimpedence = \frac{V_2}{I_2}\Big|_{I_1=0}$$

Impedance Parameter Equivalent

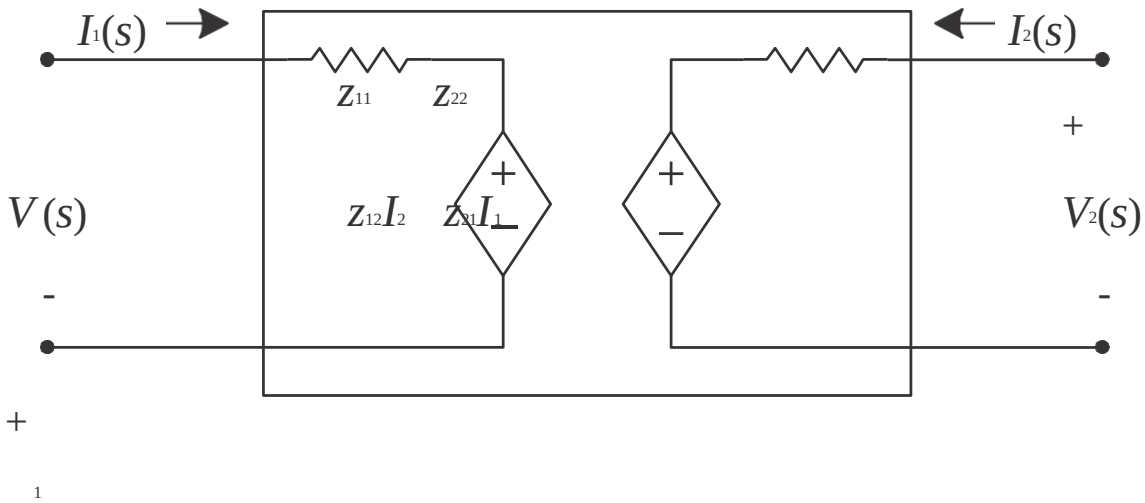

$$V_1 = z_{11}I_1 + z_{12}I_2$$

$$V_2 = z_{21}I_1 + z_{22}I_2$$

- Once we know what the impedance parameters are, we can model the behavior of the two-port with an equivalent circuit.
- Notice the similarity to Th´evenin and Norton equivalents

<u>Admittance Parameters</u>

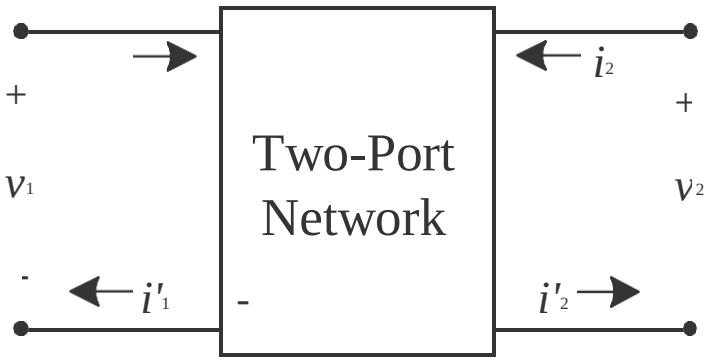

$$I_1 = y_{11}V_1 + y_{12}V_2$$

$$I_2 = y_{21}V_1 + y_{22}V_2$$

$$Y_{11} = \text{input admittance} = \frac{I_1}{V_1}\Big|_{V_2 = 0}$$

Y_{21} = forward transfer admittance = $\left.\frac{I_2}{V_1}\right|_{V_2 = 0}$

Y_{22} = output admittance = $\left.\frac{I_1}{V_2}\right|_{V_1 = 0}$

Y_{12} = reverse transfer admittance = $\left.\frac{I_1}{V_2}\right|_{V_1 = 0}$

Hybrid Parameters

$$V_1 = h_{11} I_1 + h_{12} V_2$$

$$I_2 = h_{21} I_1 + h_{22} V_2$$

h_{11} = input impedance = $\left.\frac{V_1}{I_1}\right|_{V_2 = 0}$

h_{21} = forward current ratio = $\left.\frac{I_2}{I_1}\right|_{V_2 = 0}$

h_{12} = reverse voltage ratio = $\left.\frac{V_1}{V_2}\right|_{I_1 = 0}$

h_{22} = output admittance = $\left.\frac{I_2}{V_2}\right|_{I_1 = 0}$

Example:

Given the following circuit. Determine the Z parameters.

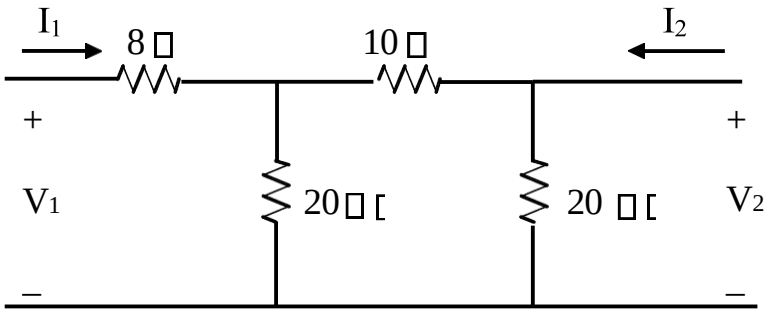

$Z_{11} = 8 + 20||30 = 20\ \Omega$

$Z_{22} = 20||30 = 12\ \Omega$

$$Z_{12} = \left.\frac{V_1}{I_2}\right|_{I_1 = 0}$$

$$V_{12} = \frac{20xI_2}{20 + 30}x20 = 8xI_2 \text{ Therefore } z_{12} = \frac{8xI_2}{I_2} = 8\ \Omega = z_{21}$$

The Z parameter equations can be expressed in matrix form as follows.

$$\begin{bmatrix} V_1 \\ V_2 \end{bmatrix} = \begin{bmatrix} z_{11} & z_{12} \\ z_{21} & z_{22} \end{bmatrix} \begin{bmatrix} I_1 \\ I_2 \end{bmatrix}$$

$$\begin{bmatrix} V_1 \\ V_2 \end{bmatrix} = \begin{bmatrix} 20 & 8 \\ 8 & 12 \end{bmatrix} \begin{bmatrix} I_1 \\ I_2 \end{bmatrix}$$

Example:

Given the following circuit. Determine the Y parameters.

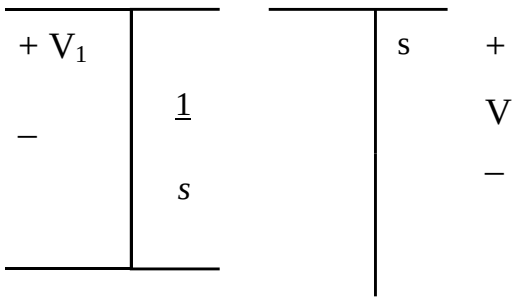

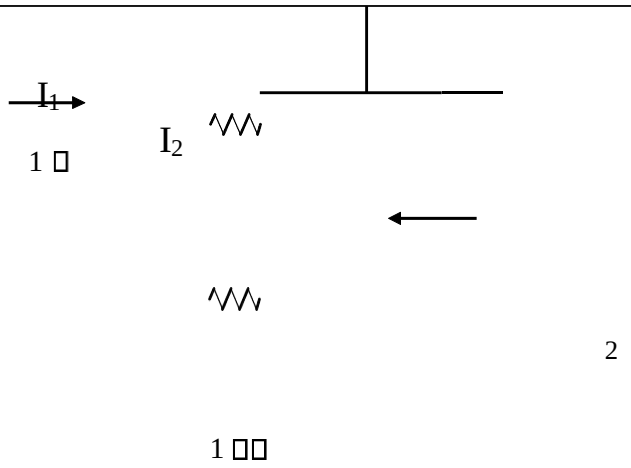

$$I_1 = y_{11} V_1 + y_{12} V_2$$

$$I_2 = y_{21} V_1 + y_{22} V_2$$

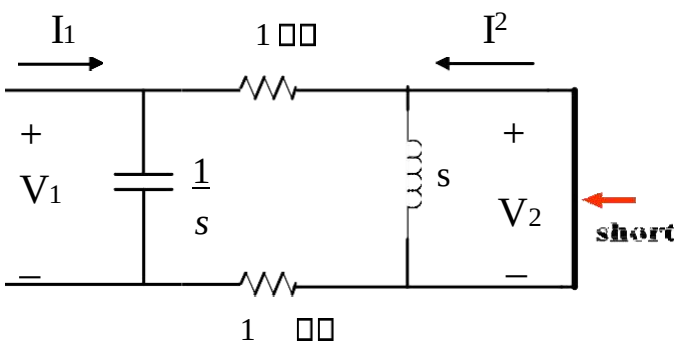

To find y_{11}

□□ 2 □□ $\frac{2/s}{/}$ ——

$V_1 \square I_1(2 \square 1/s) \square I_1 \square\square 2/s$ □1□□□

$$\text{So } y_{11} \square \frac{I_1}{V_1} \quad y_{11} \square \frac{I_1}{V_1}\Big|_{V_2 \square 0} \square s \square 0.5$$

To find y_{12} and y_{21} we reverse things and short V_1

$$y_{21} \square \frac{I_2}{V_2}\Big|_{V_1 \square 0}$$

$$V_2 \square \square 2I_1$$

$$y_{21} = \frac{I_2}{V_1} = 0.5 \text{ S}$$

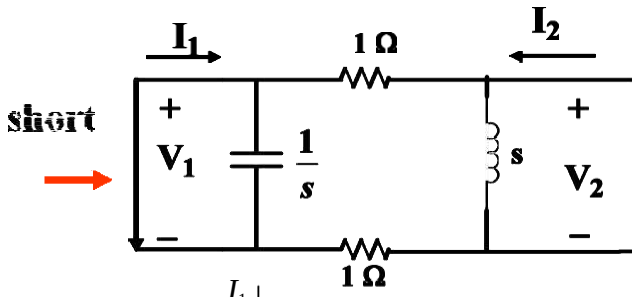

$$y_{12} = \left.\frac{I_1}{V_2}\right|_{V_1=0}$$

$$V_2 = 2I_1 \qquad y_{12} = \frac{I_1}{V_2} = 0.5s$$

$$y_{22} = 0.5 + \frac{1}{s}$$

$$s \qquad 2s \qquad 1 \quad y_{22} = \frac{I_2}{V_2}\Big|_{V_1=0} \qquad V_2 = I_1$$

$$y_{22} = 0.5 + \frac{1}{2(s+2)} \qquad y_{22} = s$$

Problem 1

Find the Z and Y parameter for the networks shown in figure.

a.

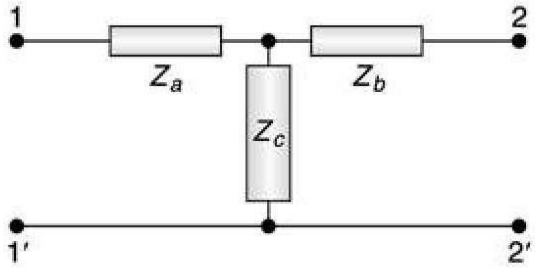

b.

c. (c)

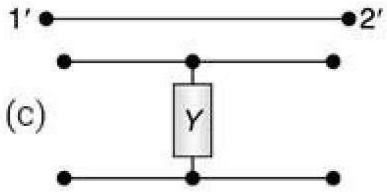

d.

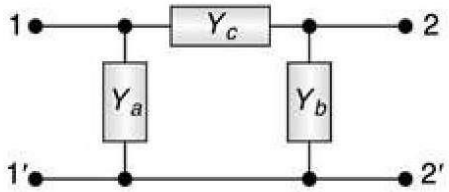

Solution

a. By KVL, $(Z_a + Z_c)I_1 + Z_c I_2 = V_1$

and $Z_c I_1 + (Z_b + Z_c)I_2 = V_2$

Thus, the Z-parameters are:

$$z_{11} = (Z_a + Z_c),\ z_{12} = z_{21} = Z_c,\quad z_{22} = (Z_b + Z_c)$$

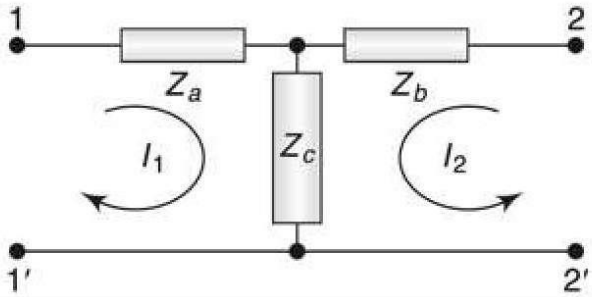

b. By KCL,

$$I_1 = \frac{V_1 - V_2}{Z} = \frac{1}{Z}V_1 - \frac{1}{Z}V_2$$

and $I_2 = \frac{V_2 - V_1}{Z} = -\frac{1}{Z}V_1 + \frac{1}{Z}V_2$

Thus, the y-parameters are,

$$y_{11} = \frac{1}{Z} = y_{22} \quad y_{12} = y_{21} = -\frac{1}{Z}$$

Since, $\Delta y = y_{11}y_{22} - y_{12}y_{21} = 0$, the z-parameters do not exist for this network.

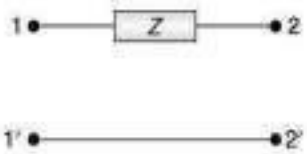

c. By KVL,

$V_1 =$

$$\frac{I_1 + I_2}{Y} = V_2 \quad \text{or}, V_1 = \left(\frac{1}{Y}\right)I_1 + \left(\frac{1}{Y}\right)I_2 \quad \text{and} \quad V_2 = \left(\frac{1}{Y}\right)I_1 + \left(\frac{1}{Y}\right)I_2$$

Thus, the z-parameters are,

$$z_{11} = z_{22} = \frac{1}{Y} = z_{12} = z_{21}$$

Since, $\Delta z = z_{11}z_{22} - z_{12}z_{21} = 0$, the y-parameters do not exist for this network.

d. By KCL,

$$I_1 = Y_a V_1 + (V_1 - V_2)Y_c = V_1(Y_a + Y_c) - V_2 Y_c$$
$$I_2 = Y_b V_2 + (V_2 - V_1)Y_c = -V_1 Y_c + V_2(Y_b + Y_c)$$

Thus, the y-parameters are:

$$y_{11} = Y_a + Y_c;\ y_{12} = y_{21} = -Y_c;\ y_{22} = Y_b + Y_c$$

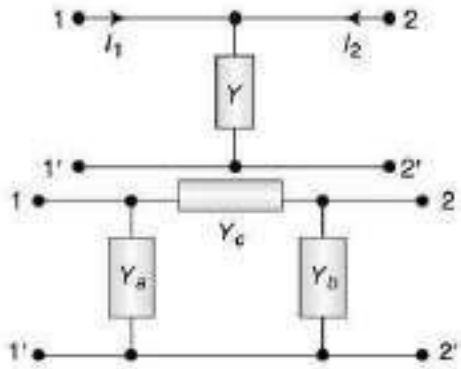

Problem 2

a. The following equations give the voltages V_1 and V_2 at the two ports of a two port network, $V_1 = 5I_1+2I_2$, $V_2 = 2I_1+I_2$;

   A load resistance of 3 Ω is connected across port-2. Calculate the input impedance.

b. The z-parameters of a two port network are $z_{11} = 5\ \Omega$, $z_{22} = 2\ \Omega$, $z_{12} = z_{21} = 3\ \Omega$. Load resistance of 4 Ω is connected across the output port. Calculate the input impedance.

Solution

a. From the given equations,

$V_1 = 5I_1 + 2I_2$ (i)

$V_2 = 2I_1 + I_2$ (ii)

At the output, $V_2 = -I_2R_L = -3I_2$

Putting this value in (ii),

$-3I_2 = 2I_1 + I_2$ fi $I_2 = -I_1/2$

Putting in (i), $V_1 = 5I_1 + \left(\frac{-I_1}{2}\right) = 4I_1$

∴ Input impedance, $Z_{in} = \frac{V_1}{I_1} = 4\Omega$

b. [Same as Prob. (a)] $Z_{in} = \frac{V_1}{I_1} = 3.5\Omega$

Problem 3

Determine the h-parameter with the following data:

i. with the output terminals short circuited, $V_1 = 25$ V, $I_1 = 1$ A, $I_2 = 2$ A

ii. with the input terminals open circuited, $V_1 = 10$ V, $V_2 = 50$ V, $I_2 = 2$ A

Solution

The *h*-parameter equations are,

$$V_1 = h_{11}I_1 + h_{12}V_2$$
$$I_2 = h_{21}I_1 + h_{22}V_2$$

a. <u>With output short-circuited</u>, $V_2 = 0$, given: $V_1 = 25$ V, $I_1 = 1$ A and $I_2 = 2$ A.

$$\therefore \quad \text{and} \quad \left.\begin{aligned} 25 &= h_{11} \times 1 \\ 2 &= h_{21} \times 1 \end{aligned}\right\} \Rightarrow h_{11} = 25\ \Omega, \text{ and } h_{21} = 2$$

b. <u>With input open-circuited</u>, $I_1 = 0$, given: $V_1 = 10$ V, $V_2 = 50$ V and $I_2 = 2$ A.

$$\therefore \quad \text{and} \quad \left.\begin{aligned} 10 &= h_{12} \times 50 \\ 2 &= h_{22} \times 50 \end{aligned}\right\} \Rightarrow h_{12} = \frac{1}{5} = 0.2 \text{ and } h_{23} = \frac{1}{25}\ \mho = 0.04\ \mho$$

Thus, the *h*-parameters are:

$$[h] = \begin{bmatrix} 25\ \Omega & 0.2 \\ 2 & 0.04\ \Omega^{-1} \end{bmatrix}$$

<u>Problem 4</u>

a. Find the equivalent π-network for the *T*-network shown in the Fig. (a).

b. Find the equivalent *T*-network for the π-network shown in the Fig. (b).

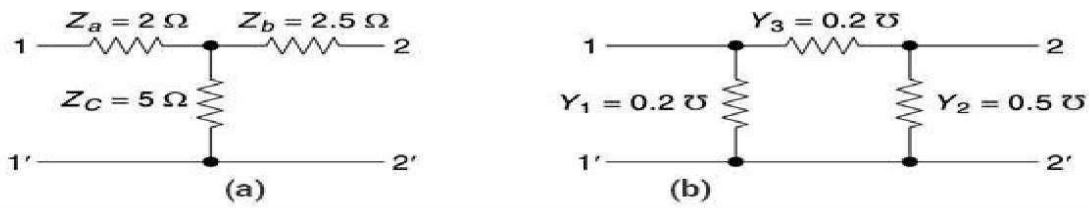

Solution

a. Let the equivalent π-network have Y_C as the series admittance and Y_A and Y_B as the shunt admittances at port-1 and port-2, respectively.

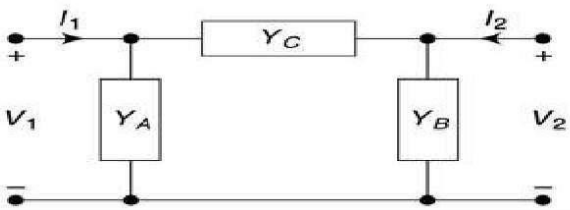

Now, the z-parameters are given as:

$$z_{11} = (Z_A + Z_C) = 7\ \Omega,\ z_{12} = z_{21} = Z_C = 5\ \Omega,\ z_{22} = (Z_B + Z_C) = 7.5\ \Omega$$

$$\therefore \Delta z = (7 \times 7.5 - 5 \times 5) = 27.5\ \Omega^2$$

$$\therefore y_{11} = \frac{z_{22}}{\Delta z} = \frac{7.5}{27.5}\ \mho$$

$$y_{12} = y_{21} = -\frac{z_C}{\Delta z} = -\frac{5}{27.5}\ \mho$$

$$y_{22} = \frac{z_{11}}{\Delta z} = \frac{7}{27.5}\ \mho$$

$$\therefore Y_A = (y_{11} + y_{12}) = \frac{2.5}{27.5} = \frac{1}{11}\ \mho$$

$$\therefore Y_B = (y_{22} + y_{12}) = \frac{2}{27.5}\ \mho$$

and $Y_C = -y_{21} = \frac{5}{27.5} = \frac{2}{11}\ \mho$

Thus, the impedances of the equivalent π-networks are:

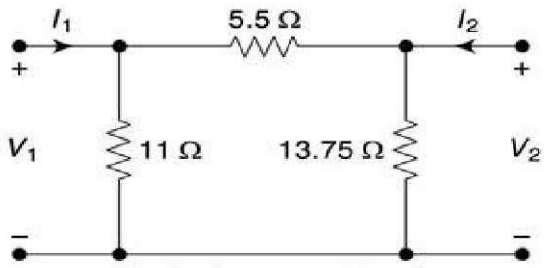

Equivalent π-network

$$\left.\begin{aligned} Z_A &= \frac{1}{Y_A} = 11\ \Omega, \\ Z_B &= \frac{1}{Y_B} = 13.75\ \Omega, \\ Z_C &= \frac{1}{Y_C} = 5.5\ \Omega \end{aligned}\right\}$$

b.

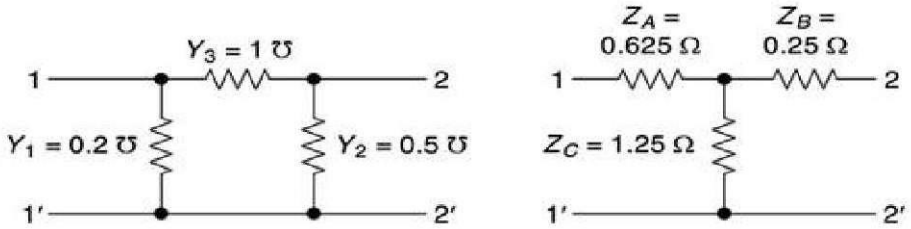

π-network **Equivalent T-network**

The y-parameters,

$$y_{11} = 1.2\ \mho,\ y_{12} = y_{21} = -1\ \mho, \text{ and } y_{22} = 1.5\ \mho$$

$$\therefore \Delta y = (1.2 \times 1.5 - 1) = 0.8$$

$$\therefore z_{11} = \frac{y_{22}}{\Delta y} = \frac{1.5}{0.8}\ \Omega,\ z_{12} = z_{21} = -\frac{y_{12}}{\Delta y} = \frac{1}{0.8}\ \Omega,\ z_{22} = \frac{y_{11}}{\Delta y} = \frac{1.2}{0.8}\ \Omega$$

$$\left.\begin{aligned} Z_A &= (z_{11} - z_{12}) = \frac{0.5}{0.8} = 0.625\ \Omega \\ \therefore Z_B &= (z_{22} - z_{12}) = \frac{0.2}{0.8} = 0.25\ \Omega \\ Z_C &= z_{12} = \frac{1}{0.8} = 1.25\ \Omega \end{aligned}\right\}$$

CHAPTER 9

LOW PASS FILTER INTRODUCTION

Basically, an electrical filter is a circuit that can be designed to modify, reshape or reject all unwanted frequencies of an electrical signal and accept or pass only those signals wanted by the circuit's designer. In other words they "filter-out" unwanted signals and an ideal filter will separate and pass sinusoidal input signals based upon their frequency.

In low frequency applications (up to 100kHz), passive filters are generally constructed using simple RC(Resistor-Capacitor) networks, while higher frequency filters (above 100kHz) are usually made from RLC (Resistor-Inductor-Capacitor) components.

Passive Filters are made up of passive components such as resistors, capacitors and inductors and have no amplifying elements (transistors, op-amps, etc) so have no signal gain, therefore their output level is always less than the input.

Filters are so named according to the frequency range of signals that they allow to pass through them, while blocking or "attenuating" the rest. The most commonly used filter designs are the:

- 1. The Low Pass Filter – the low pass filter only allows low frequency signals from 0Hz to its cut-off frequency, ƒc point to pass while blocking those any higher.
- 2. The High Pass Filter – the high pass filter only allows high frequency signals from its cut-off frequency, ƒc point and higher to infinity to pass through while blocking those any lower.
- 3. The Band Pass Filter – the band pass filter allows signals falling within a certain frequency band setup between two points to pass through while blocking both the lower and higher frequencies either side of this frequency band.
- 4 Band Stop Filter - It is so called *band-elimination*, *band-reject*, or *notch* filters; this kind of filter passes all frequencies above and below a particular range set by the component values.

Simple First-order passive filters (1st order) can be made by connecting together a single resistor and a single capacitor in series across an input signal, (Vin) with the output of the filter, (Vout) taken from the junction of these two components. Depending on which way around we connect the resistor and the capacitor with regards to the output signal determines the type of filter construction resulting in either a Low Pass Filter or a High Pass Filter.

As the function of any filter is to allow signals of a given band of frequencies to pass unaltered while attenuating or weakening all others those are not

84

wanted, we can define the amplitude response characteristics of an ideal filter by using an ideal frequency response curve of the four basic filter types as shown.

IDEAL FILTER RESPONSE CURVES

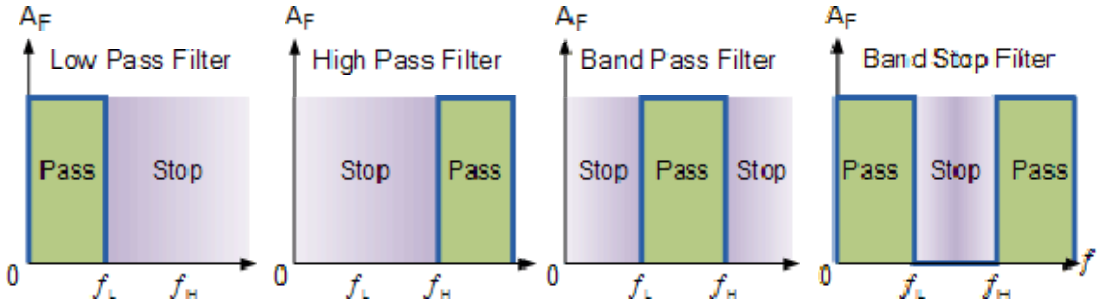

A Low Pass Filter can be a combination of capacitance, inductance or resistance intended to produce high attenuation above a specified frequency and little or no attenuation below that frequency. The frequency at which the transition occurs is called the "cutoff" frequency. The simplest low pass filters consist of a resistor and capacitor but more sophisticated low pass filters have a combination of series inductors and parallel capacitors. In this tutorial we will look at the simplest type, a passive two component RC low pass filter.

THE LOW PASS FILTER

A simple passive RC Low Pass Filter or LPF, can be easily made by connecting together in series a single Resistor with a single Capacitor as shown below. In this type of filter arrangement the input signal (Vin) is applied to the series combination (both the Resistor and Capacitor together) but the output signal (Vout) is taken across the capacitor only. This type of filter is known generally as a "first-order filter" or "one-pole filter", why first-order or single-pole?, because it has only "one" reactive component, the capacitor, in the circuit.

RC LOW PASS FILTER CIRCUIT

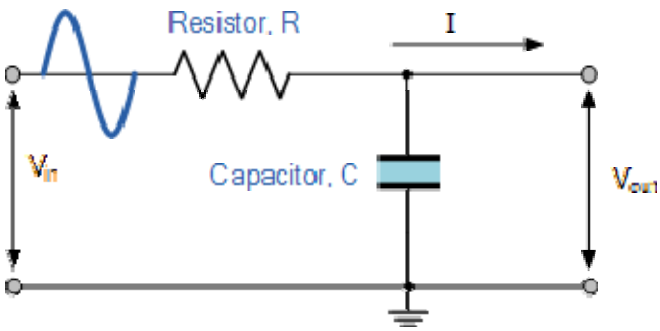

As mentioned previously in the Capacitive Reactance tutorial, the reactance of a capacitor varies inversely with frequency, while the value of the resistor remains constant as the frequency changes. At low frequencies the capacitive reactance, (Xc) of the capacitor will be very large compared to the resistive value of the resistor, R and as a result the voltage across the capacitor, Vc will also be large while the voltage drop across the resistor, Vr will be much lower. At high frequencies the reverse is true with Vc being small and Vr being large.

While the circuit above is that of an RC Low Pass Filter circuit, it can also be classed as a frequency variable potential divider circuit similar to the one we looked at in the Resistors tutorial. In that tutorial we used the following equation to calculate the output voltage for two single resistors connected in series.

$$V_{out} = V_{in} \times \frac{R_2}{R_1 + R_2}$$

where: $R_1 + R_2 = R_T$, the total resistance of the circuit

We also know that the capacitive reactance of a capacitor in an AC circuit is given as:

$$X_C = \frac{1}{2\pi f C} \text{ in Ohm's}$$

Opposition to current flow in an AC circuit is called impedance, symbol Z and for a series circuit consisting of a single resistor in series with a single capacitor, the circuit impedance is calculated as:

$$Z = \sqrt{R^2 + X_C^2}$$

Then by substituting our equation for impedance above into the resistive potential divider equation gives us:

RC POTENTIAL DIVIDER EQUATION

$$V_{out} = V_{in} \times \frac{X_C}{\sqrt{R^2 + X_C^2}} = V_{in} \frac{X_C}{Z}$$

So, by using the potential divider equation of two resistors in series and substituting for impedance we can calculate the output voltage of an RC Filter for any given frequency.

LOW PASS FILTER EXAMPLE

A Low Pass Filter circuit consisting of a resistor of 4k7Ω in series with a capacitor of 47nF is connected across a 10v sinusoidal supply. Calculate the output voltage (Vout) at a frequency of 100Hz and again at frequency of 10,000Hz or 10kHz.

Voltage Output at a Frequency of 100Hz.

$$Xc = \frac{1}{2\pi f C} = \frac{1}{2\pi \times 100 \times 47 \times 10^{-9}} = 33{,}863\Omega$$

$$V_{OUT} = V_{IN} \times \frac{Xc}{\sqrt{R^2 + X_C^2}} = 10 \times \frac{33863}{\sqrt{4700^2 + 33863^2}} = 9.9v$$

Voltage Output at a Frequency of 10,000Hz (10kHz).

$$X_C = \frac{1}{2\pi f C} = \frac{1}{2\pi \times 10{,}000 \times 47 \times 10^{-9}} = 338.6\Omega$$

$$V_{OUT} = V_{IN} \times \frac{X_C}{\sqrt{R^2 + X_C^2}} = 10 \times \frac{338.6}{\sqrt{4700^2 + 338.6^2}} = 0.718v$$

FREQUENCY RESPONSE

We can see from the results above that as the frequency applied to the RC network increases from 100Hz to 10 kHz, the voltage dropped across the capacitor and therefore the output voltage (Vout) from the circuit decreases from 9.9v to 0.718v.

By plotting the networks output voltage against different values of input frequency, the Frequency Response Curve or Bode Plot function of the low pass filter circuit can be found, as shown below.

Frequency Response of a 1st-order Low Pass Filter

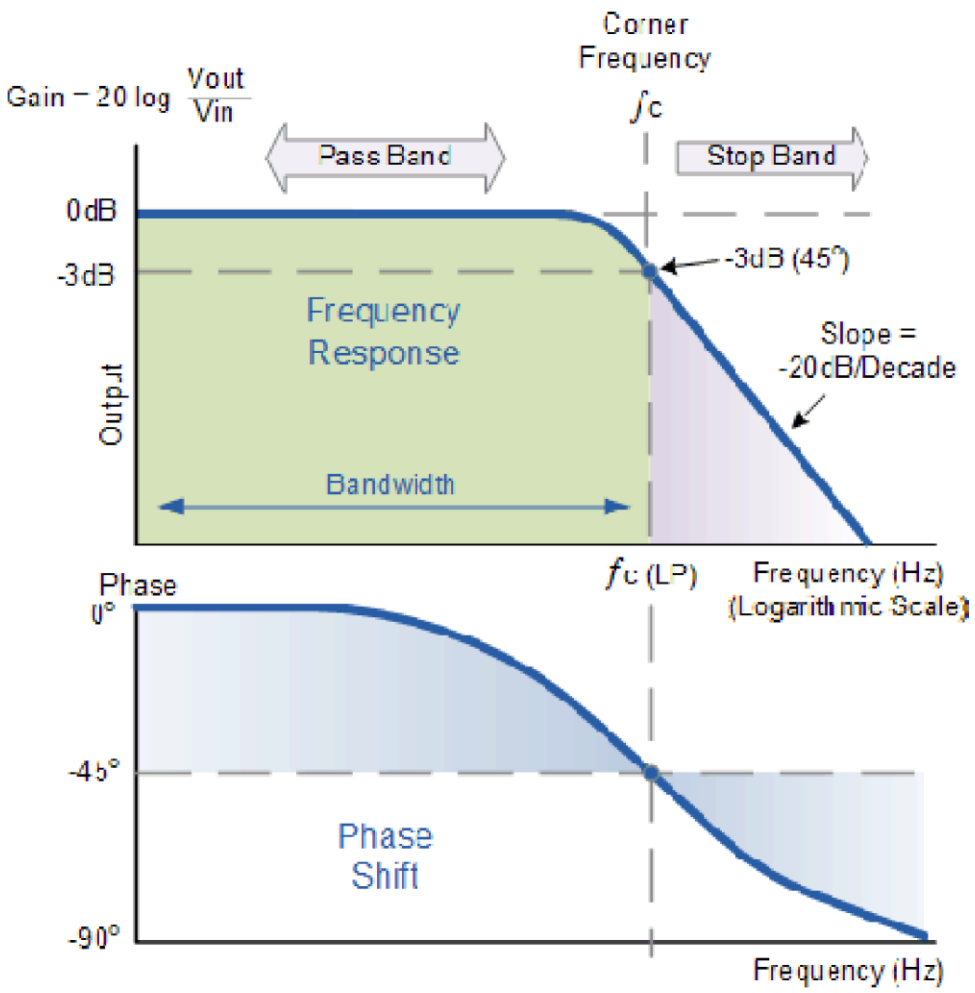

The Bode Plot shows the Frequency Response of the filter to be nearly flat for low frequencies and the entire input signal is passed directly to the output, resulting in a gain of nearly 1, called unity, until it reaches its Cut-off Frequency point (ƒc). This is because the reactance of the capacitor is high at low frequencies and blocks any current flow through the capacitor.

After this cut-off frequency point the response of the circuit decreases to zero at a slope of -20dB/ Decade or (-6dB/Octave) "roll-off". Note that the angle of the slope, this -20dB/ Decade roll-off will always be the same for any RC combination.

Any high frequency signals applied to the low pass filter circuit above this cut-off frequency point will become greatly attenuated, that is they rapidly decrease. This happens because at very high frequencies the reactance of the capacitor becomes so low that it gives the effect of a short circuit condition on the output terminals resulting in zero output.

Then by carefully selecting the correct resistor-capacitor combination, we can create a RC circuit that allows a range of frequencies below a certain value to pass through the circuit unaffected while any frequencies applied to the circuit above this cut-off point to be attenuated, creating what is commonly called a Low Pass Filter.

For this type of "Low Pass Filter" circuit, all the frequencies below this cut-off, ƒc point that are unaltered with little or no attenuation and are said to be in the filters Pass band zone. This pass band zone also represents the Bandwidth of the filter.

Any signal frequencies above this point cut-off point are generally said to be in the filters Stop band zone and they will be greatly attenuated.

This "Cut-off", "Corner" or "Breakpoint" frequency is defined as being the frequency point where the capacitive reactance and resistance are equal, R = Xc = 4k7Ω. When this occurs the output signal is attenuated to 70.7% of the input signal value or -3dB (20 log (Vout/Vin)) of the input. Although R = Xc, the output is not half of the input signal. This is because it is equal to the vector sum of the two and is therefore 0.707 of the input.

As the filter contains a capacitor, the Phase Angle (Φ) of the output signal LAGS behind that of the input and at the -3dB cut-off frequency (fc) and is - 45° out of phase. This is due to the time taken to charge the plates of the capacitor as the input voltage changes, resulting in the output voltage (the voltage across the capacitor) "lagging" behind that of the input signal. The higher the input frequency applied to the filter the more the capacitor lags and the circuit becomes more and more "out of phase".

The cut-off frequency point and phase shift angle can be found by using the following equation:

CUT-OFF FREQUENCY AND PHASE SHIFT

$$fc = \frac{1}{2\pi RC} = \frac{1}{2\pi \times 4700 \times 47 \times 10^{-9}} = 720\text{Hz}$$

$$\text{Phase Shift } \varphi = -\arctan(2\pi f RC)$$

Then for our simple example of a "Low Pass Filter" circuit above, the cut-off frequency (fc) is given as720Hz with an output voltage of 70.7% of the input voltage value and a phase shift angle of -45°.

HIGH PASS FILTERS

A High Pass Filter or HPF, is the exact opposite to that of the previously seen Low Pass filter circuit, as now the two components have been interchanged with the output signal (Vout) being taken from across the resistor as shown.

Where as the low pass filter only allowed signals to pass below its cut-off frequency point, fc, the passive high pass filter circuit as its name implies, only passes signals above the selected cut-off point, fc eliminating any low frequency signals from the waveform. Consider the circuit below.

THE HIGH PASS FILTER CIRCUIT

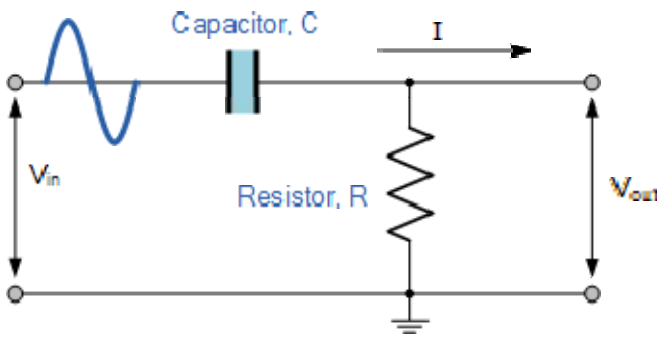

In this circuit arrangement, the reactance of the capacitor is very high at low frequencies so the capacitor acts like an open circuit and blocks any input signals at Vin until the cut-off frequency point (ƒc) is reached. Above this cut-off frequency point the reactance of the capacitor has reduced sufficiently as to now act more like a short circuit allowing the entire input signal to pass directly to the output as shown below in the High Pass Frequency Response Curve.

<u>FREQUENCY RESPONSE OF A 1ST ORDER HIGH PASS FILTER.</u>

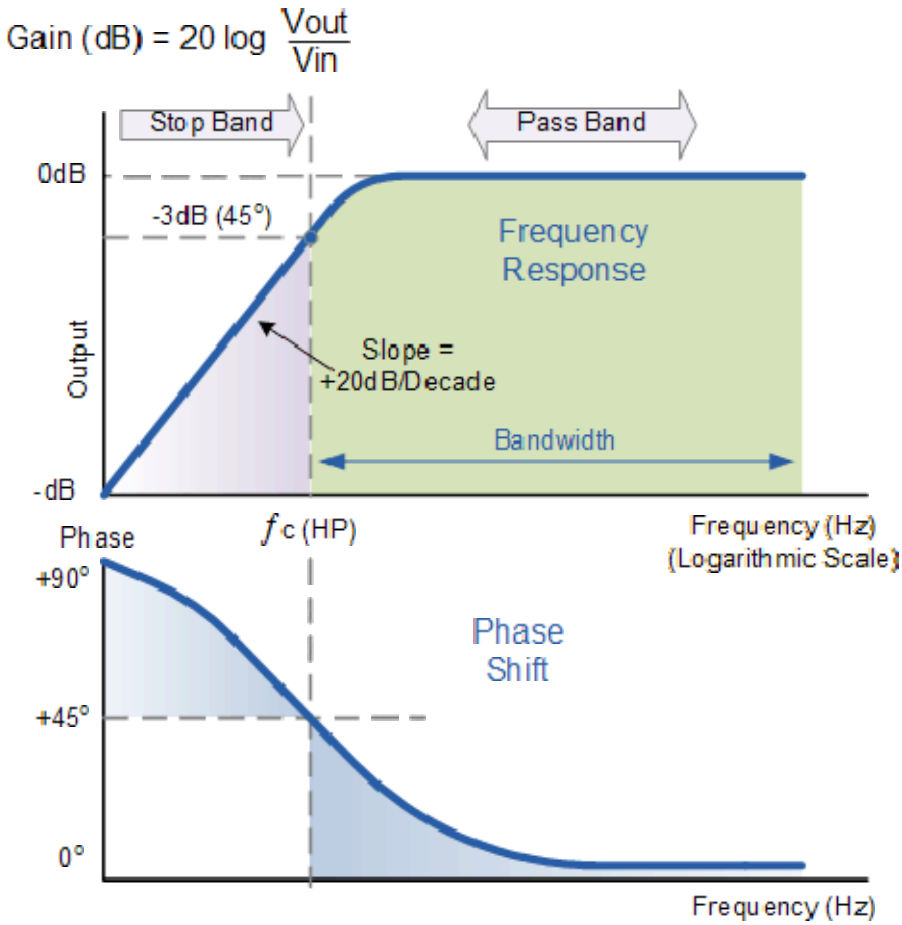

The Bode Plot or Frequency Response Curve above for a High Pass filter is the exact opposite to that of a low pass filter. Here the signal is attenuated or damped at low frequencies with the output increasing at +20dB/Decade (6dB/Octave) until the frequency reaches the cut-off point (ƒc) where again R = Xc. It has a response curve that extends down from infinity to the cut-off frequency, where the output voltage amplitude is $1/\sqrt{2}$ = 70.7% of the input signal value or -3dB (20 log (Vout/Vin)) of the input value.

Also we can see that the phase angle (Φ) of the output signal LEADS that of the input and is equal to+45° at frequency ƒc. The frequency response curve for a high pass filter implies that the filter can pass all signals out to infinity. However in practice, the high pass filter response does not extend to infinity but is limited by the electrical characteristics of the components used.

The cut-off frequency point for a first order high pass filter can be found using the same equation as that of the low pass filter, but the equation for the phase shift is modified slightly to account for the positive phase angle as shown below.

CUT-OFF FREQUENCY AND PHASE SHIFT

$$fc = \frac{1}{2\pi RC}$$

$$Phase\ Shift\ \phi = \arctan \frac{1}{2\pi fRC}$$

The circuit gain, Av which is given as Vout/Vin (magnitude) and is calculated as:

$$A_V = \frac{V_{OUT}}{V_{IN}} = \frac{R}{\sqrt{R^2 + XC^2}} = \frac{R}{Z}$$

$$\text{at low } f: \ Xc \to \infty, \ \ Vout = 0$$

$$\text{at high } f: \ Xc \to 0, \ \ Vout = Vin$$

HIGH PASS FILTER EXAMPLE.

Calculate the cut-off or "breakpoint" frequency (ƒc) for a simple high pass filter consisting of an82pF capacitor connected in series with a 240kΩ resistor.

$$fc = \frac{1}{2\pi RC} = \frac{1}{2\pi \, x \, 240{,}000 x 82 x 10^{-12}} = 8{,}087\ Hz\ or\ 8kHz$$

BAND PASS FILTERS

The cut-off frequency or ƒc point in a simple RC passive filter can be accurately controlled using just a single resistor in series with a non-polarized capacitor, and depending upon which way around they are connected either a low pass or a high pass filter is obtained.

One simple use for these types of Passive Filters is in audio amplifier applications or circuits such as in loudspeaker crossover filters or pre-amplifier tone controls. Sometimes it is necessary to only pass a certain range of frequencies that do not begin at 0Hz, (DC) or end at some high frequency point but are within a certain frequency band, either narrow or wide.

By connecting or "cascading" together a single Low Pass Filter circuit with a High Pass Filter circuit, we can produce another type of passive RC filter that passes a selected range or "band" of frequencies that can be either narrow or wide while attenuating all those outside of this range. This new type of passive filter arrangement produces a frequency selective filter known commonly as a Band Pass Filter or BPF for short.

BAND PASS FILTER CIRCUIT

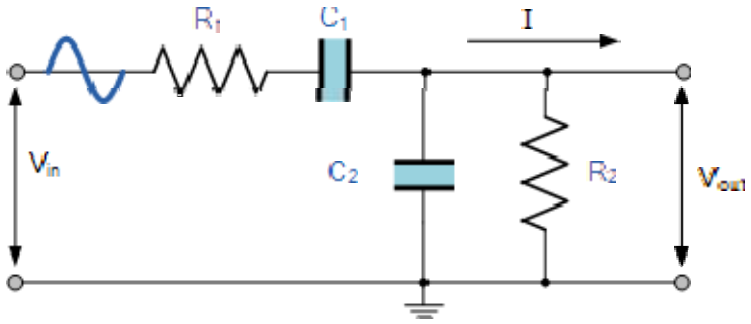

Unlike a low pass filter that only pass signals of a low frequency range or a high pass filter which pass signals of a higher frequency range, a Band Pass Filters passes signals within a certain "band" or "spread" of frequencies without distorting the input signal or introducing extra noise. This band of frequencies can be any width and is commonly known as the filters Bandwidth.

Bandwidth is commonly defined as the frequency range that exists between two specified frequency cut-off points (f_c), that are 3dB below the maximum centre or resonant peak while attenuating or weakening the others outside of these two points.

Then for widely spread frequencies, we can simply define the term "bandwidth", BW as being the difference between the lower cut-off frequency (f_{CLOWER}) and the higher cut-off frequency ($f_{CHIGHER}$) points. In other words, $BW = f_H - f_L$. Clearly for a pass band filter to function correctly, the cut-off frequency of the low pass filter must be higher than the cut-off frequency for the high pass filter.

The "ideal" Band Pass Filter can also be used to isolate or filter out certain frequencies that lie within a particular band of frequencies, for example, noise cancellation. Band pass filters are known generally as second-order filters, (two-pole) because they have "two" reactive component, the capacitors, within their circuit design. One capacitor in the low pass circuit and another capacitor in the high pass circuit.

Frequency Response of a 2nd Order Band Pass Filter.

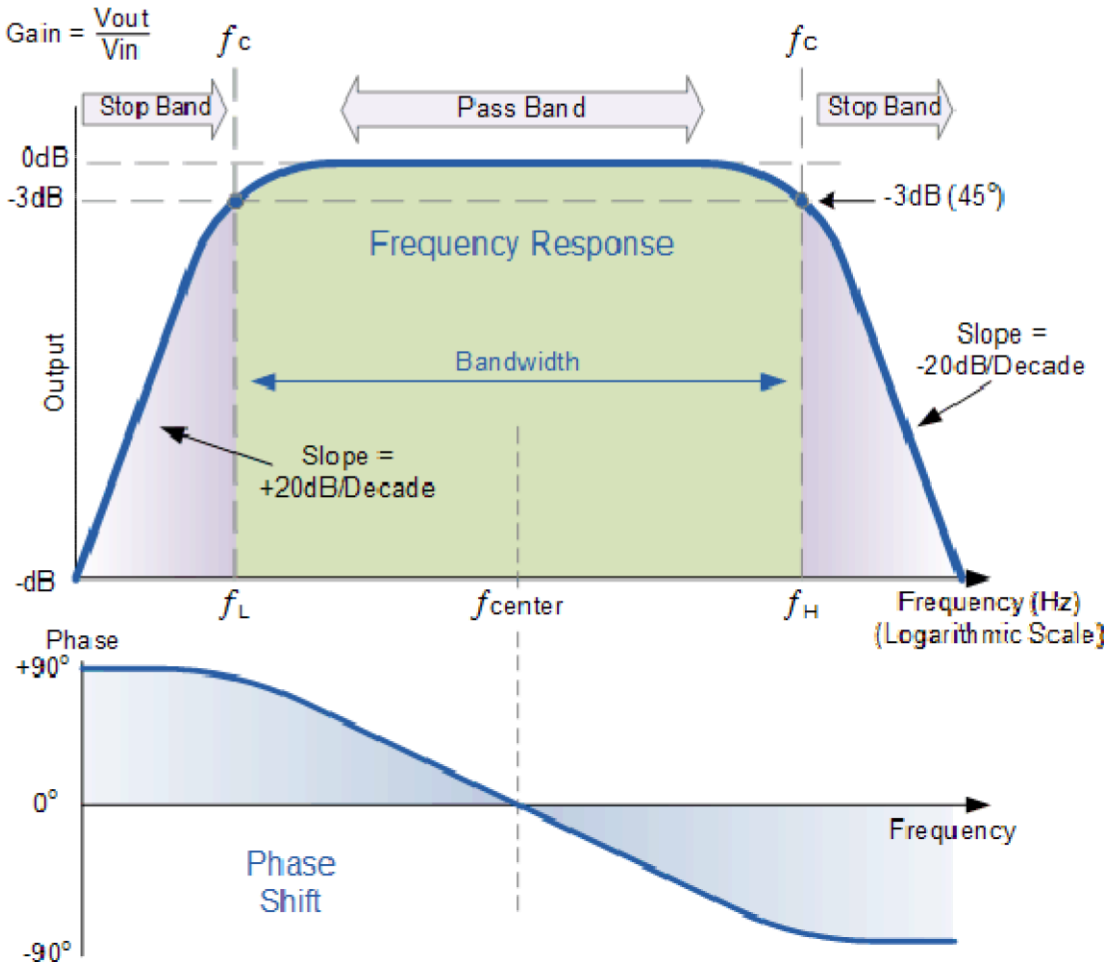

The Bode Plot or frequency response curve above shows the characteristics of the band pass filter. Here the signal is attenuated at low frequencies with the output increasing at a slope of +20dB/Decade (6dB/Octave) until the frequency reaches the "lower cut-off" point f_L. At this frequency the output voltage is again $1/\sqrt{2}$ = 70.7% of the input signal value or -3dB (20 log (Vout/Vin)) of the input.

The output continues at maximum gain until it reaches the "upper cut-off" point f_H where the output decreases at a rate of -20dB/Decade (6dB/Octave) attenuating any high frequency signals. The point of maximum output gain is generally the geometric mean of the two -3dB value between the lower and upper cut-off points and is called the "Centre Frequency" or "Resonant Peak" value fr. This geometric mean value is calculated as being $fr^2 = f_{(UPPER)} \times f_{(LOWER)}$.

A band pass filter is regarded as a second-order (two-pole) type filter because it has "two" reactive components within its circuit structure, then the phase angle will be twice that of the previously seen first-order filters, i.e., 180°. The phase angle of the output signal LEADS that of the input by +90° up to the centre or resonant frequency, fr point were it becomes "zero" degrees (0°) or "in-phase" and then changes to LAG the input by -90° as the output frequency increases.

The upper an d lower cut-off frequency points for a bandpass filter can be found using the same formula as that for both the low and high pass filters, For example.

$$fc = \frac{1}{2\pi RC} Hz$$

Then clearly, the width of the pass band of the filter can be controlled by the positioning of the two cut-off frequency points of the two filters.

Band Pass Filter Example

A second-order band pass filter is to be constructed using RC components that will only a llow a range of frequencies to pass above 1kHz (1,000Hz) and below 30kHz

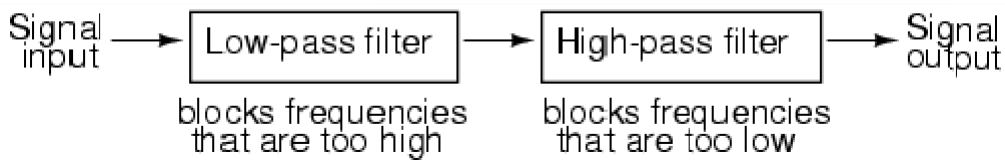

(30,000Hz). Assuming that both the resistors have values of 10kΩ´s, calculate the values of the t wo capacitors required.

The High Pass Filter Stage

The value of the capacitor C1 required to give a cut-off frequency f_L of 1kHz with a resistor value of10kΩ is calculated as:

$$C = \frac{1}{2\pi fc.R} = \frac{1}{2\pi x 1{,}000 x 10{,}000} = 15.8\,nF$$

Then, the values of R1 and C1 required for the high pass stage to give a cut-off frequency of 1.0kHz are: R1 = 10kΩ´s and C1 = 15nF.

The Low Pass Filter Stage

The value of the capacitor C2 required to give a cut-off frequency f_H of 30kHz with a resistor value of10kΩ is calculated as:

$$C = \frac{1}{2\pi fc.R} = \frac{1}{2\pi x 30{,}000 x 10{,}000} = 510\,pF$$

Then, the values of R2 and C2 required for the low pass stage to give a cut-

off frequency of 30kHz are, R = 10kΩ´s and C = 510pF. However, the nearest preferred value of the calculated capacitor value of 510pF is 560pF so this is used instead.

With the values of both the resistances R1 and R2 given as 10kΩ, and the two values of the capacitors C1 and C2 found for the high pass and low pass filters as 15nF and 560pF respectively, then the circuit for our simple passive Band Pass Filter is given as.

Completed Band Pass Filter Circuit

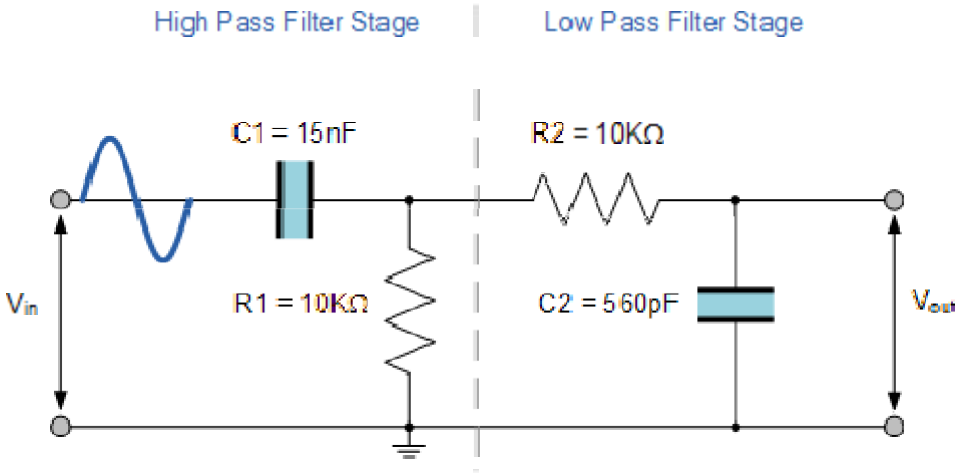

Band Pass Filter Resonant Frequency

We can also calculate the "Resonant" or "Centre Frequency" (fr) point of the band pass filter were the output gain is at its maximum or peak value. This peak value is not the arithmetic average of the upper and lower -3dB cut-off points as you might expect but is in fact the "geometric" or mean value. This geometric mean value is calculated as being $f_{r\,2} = f_{c(UPPER)} \times f_{c(LOWER)}$ for example:

Centre Frequency Equation

$$fr = \sqrt{f_L \; x \; f_H}$$

- Where, f_r is the resonant or centre frequency
- f_L is the lower -3dB cut-off frequency point
- f_H is the upper -3db cut-off frequency point

And in our simple example above, the calculated cut-off frequencies were found to be f_L = 1,060 Hz and f_H = 28,420 Hz using the filter values.

Then by substituting these values into the above equation gives a central resonant frequency of:

$$fr = \sqrt{f_L \; x \; f_H} = \sqrt{1{,}060 \; x \; 28{,}420} = 5{,}48\,kHz$$

Band-stop filters

It is so called *band-elimination*, *band-reject*, or *notch* filters; this kind of filter passes all frequencies above and below a particular range set b y the component values. Not surprisingly, it can be made out of a low-pass and a high-pass filter, just like the band-pass design, except that this time we connect the two filter sections in parallel with each other instead of in series. (Figure below)

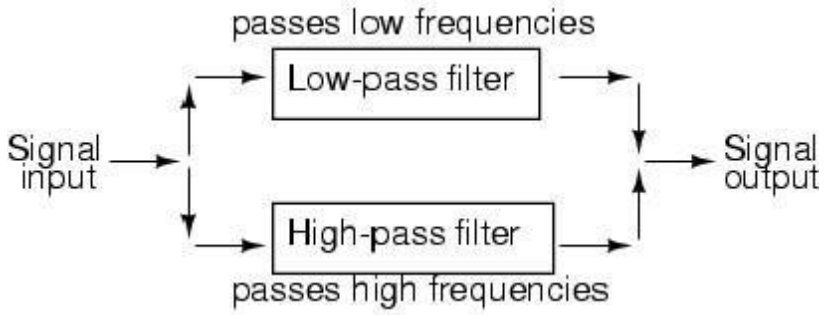

System level block diagram of a band-stop filter.

Constructed using two capacitive filter sections, it looks something like (Figure below).

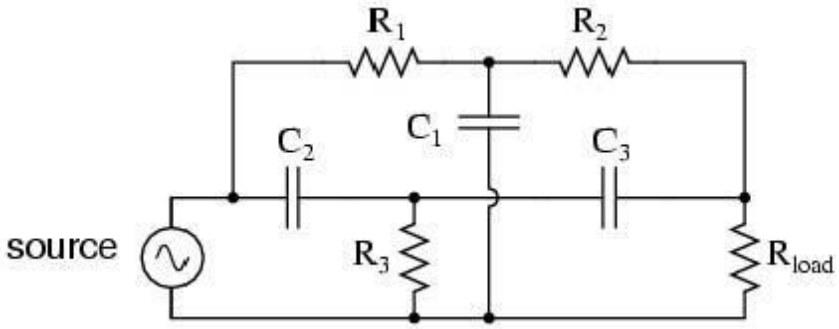

Butterworth Filter

A Butterworth filter is a type of signal processing filter designed to have a frequency response as flat as possible in the passband. Hence the Butterworth filter is also known as "maximally flat magnitude filter". It was invented in 1930 by the British engineer and physicist Stephen Butterworth in his paper titled "*On the Theory of Filter Amplifiers*". The frequency response of the Butterworth filter is flat in the passband (i.e. a bandpass filter) and roll-offs towards zero in the stopband. The rate of roll-off response depends on the order of the filter. The number of reactive elements used in the filter circuit will decide the order of the filter.

The inductor and capacitor are reactive elements used in filters. But in the case of Butterworth filter only capacitors are used. So, the number of capacitors will decide the order of the filter.

Here, we will discuss the Butterworth filter with a low pass filter. Similarly, the high pass filter can be designed by just changing the position of resistance and capacitance.

Butterworth Low Pass Filter Design

While designing the filter, the designer tries to achieve a response near to the ideal filter. It is very difficult to match results with the exact ideal characteristic. We need to use complex higher-order If you increase the order of the filter, the number of cascade stages with the filter is also increased. But in practice, we cannot achieve Butterworth's ideal frequency response. Because it produces excessive ripple in the passband.In Butterworth filter, mathematically it is possible to get flat frequency response from 0 Hz to the cut-off frequency at -3dB with no ripple. If the frequency is more than the cut-off frequency, it will roll-off towards zero with the rate of -20 dB/decade for the first-order filter.If you increase the order of the filter, the rate of a roll-off period is also increased. And for second-order, it is -40 dB/decade. The quality factor for the Butterworth filter is 0.707. The below figure shows the frequency response of the Butterworth filter for various orders of the filter

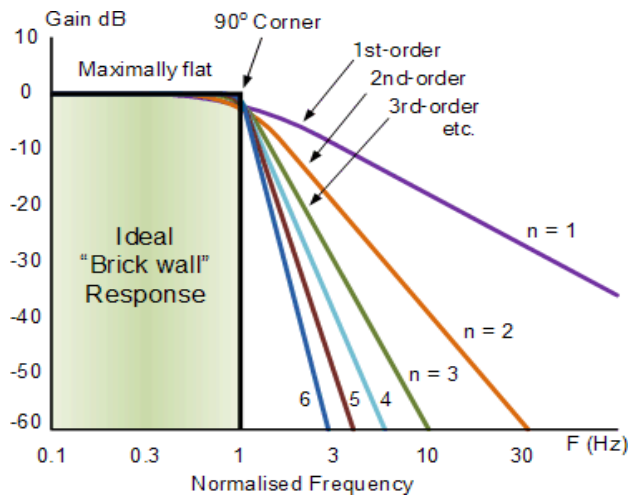

Frequency Response of Butterworth FilterThe generalized form of frequency response for nth-order Butterworth low-pass filter is;

$$H(j\omega) = \frac{1}{\sqrt{1 + \varepsilon^2 (\frac{\omega}{\omega_C})^{2n}}}$$

Where,

n = order of the filter,
ω = operating frequency (passband frequency) of circuit
ω_C = Cut-off frequency
ε = maximum passband gain = A_{max}
The below equation is used to find the value of ε.

$$H_1 = \frac{H_0}{\sqrt{1 + \varepsilon^2}}$$

Where,
H_1 = minimum passband gain
H_0 = maximum passband gain

<u>First-order Lowpass Butterworth Filter</u>

The lowpass filter is a filter that allows the signal with the frequency is lower than the cutoff frequency and attenuates the signals with the frequency is more than cutoff frequency. In the first-order filter, the number of reactive components is only one. The below figure shows the circuit diagram of the first-order lowpass Butterworth filter.

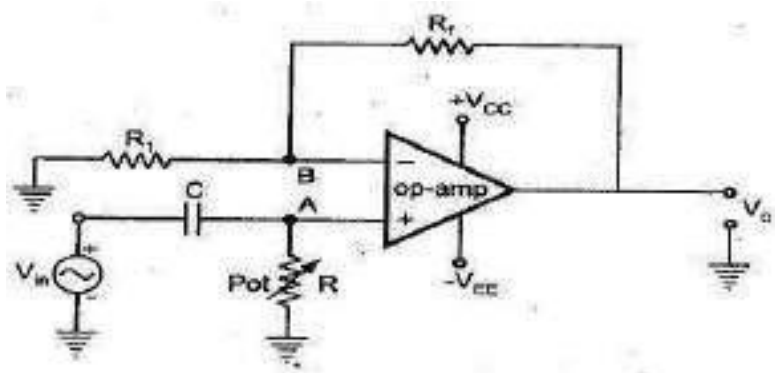

Fig. 2.79 First order high pass Butterworth filter

The low pass Butterworth filter is an active Low pass filter as it consists of the op-amp. This op-amp operates on non-inverting mode. Hence, the gain of the filter will decide by the resistor R_1 and R_F. And the cutoff frequency decides by R and C.
Now, if you apply the voltage divider rule at point Va and find the voltage across a capacitor. It is given as;

$$V_a = \frac{-jX_C}{R - jX_C} V_{in}$$

$$V_a = \frac{-j(\frac{1}{2\pi fC})}{R - j(\frac{1}{2\pi fC})} V_{in}$$

$$V_a = \frac{-j}{2\pi fRC - j} V_{in}$$

$$V_a = \frac{V_{in}}{1 - \frac{2\pi fRC}{j}}$$

$$V_a = \frac{V_{in}}{1 + j2\pi fRC}$$

Because of the non-inverting configuration of an op-amp,

$$V_0 = \left(1 + \frac{R_f}{R_1}\right) V_a$$

$$V_0 = \left(1 + \frac{R_f}{R_1}\right) \frac{V_{in}}{1 + j2\pi fRC}$$

$$\frac{V_0}{V_a} = \frac{A_f}{1 + j\frac{f}{f_c}}$$

WHERE

$$A_f = 1 + \frac{R_F}{R_1}$$

A_f = Gain of filter in Passband

$$f_c = \frac{1}{2\pi RC}$$

f_c = Cutoff Frequency

f = Operating Frequency

$$\frac{V_0}{V_a} = \left|\frac{V_0}{V_a}\right| \angle\phi$$

$$\left|\frac{V_0}{V_a}\right| = \frac{A_f}{\sqrt{1 + j\left(\frac{f}{f_c}\right)^2}}$$

$$\phi = -\tan^{-1}\left(\frac{f}{f_c}\right)$$

1. At very low frequency, $f \ll f_c$

$$\left|\frac{V_0}{V_a}\right| \approx A_f(Constant)$$

2. At cutoff frequency, $f = f_c$

$$\left|\frac{V_0}{V_a}\right| = \frac{A_f}{\sqrt{2}} = 0.707A_f$$

3. At high frequency, $f > f_c$

$$\left|\frac{V_0}{V_a}\right| < A_f$$

The below figure shows the frequency response of first-order lowpass Butterworth filter.

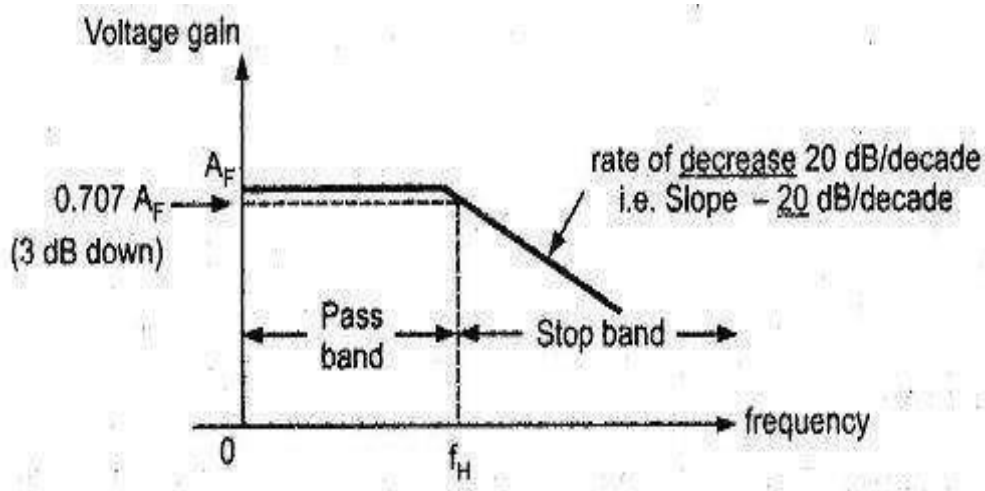

Fig. 2.75 Frequency response

Second-order Butterworth Filter

The second-order Butterworth filter consists of two reactive components. The circuit diagram of a second-order low pass Butterworth filter is as shown in the below figure.

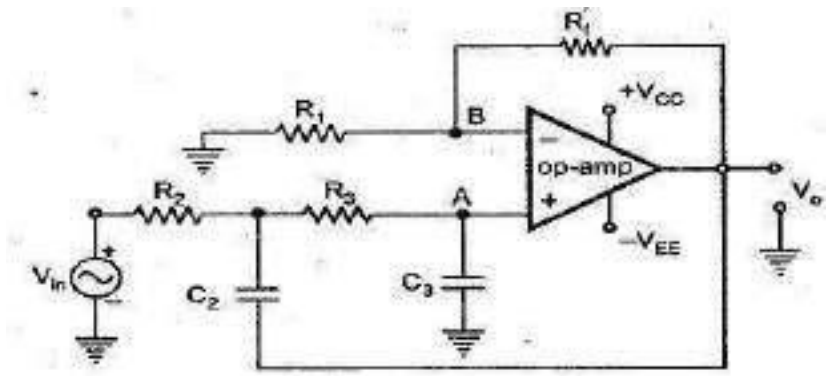

Fig. 2.76 Second order low pass butterworth filter

In this type of filter, resistor R and R_F are the negative feedback of op-amp. And the cutoff frequency of the filter decides by R_2, R_3, C_2, and C_3.The second-order lowpass Butterworth filter consists of two back-to-back connected RC networks. And R_L is the load resistance. First-order and second-order Butterworth filters are very important. Because we can get higher-order Butterworth filter by just cascading of the first-order and second-order Butterworth filters.
Let's analyse the circuit of second-order Butterworth filter,

Apply Kirchhoff's Current Law at point V_1.

$$I_1 = I_2 + I_3$$

$$\frac{V_{in} - V_1}{R_2} = \frac{V_1 - V_0}{\frac{1}{sC_2}} + \frac{V_1 - V_a}{R_3} \qquad (1)$$

Using potential divider rule at point V_a

$$V_a = V_1 \left[\frac{\frac{1}{sC_3}}{R_3 + \frac{1}{sC_3}} \right]$$

$$V_a = V_1 \left[\frac{\frac{1}{sC_3}}{\frac{R_3 sC_3 + 1}{sC_3}} \right]$$

$$V_a = \frac{V_1}{1 + sR_3C_3}$$

Put the value of V_1 in equation-(1) $\quad V_1 = V_a(1 + sR_3C_3)$

$$\frac{V_{in} - V_a(1 + sR_3C_3)}{R_2} = \frac{V_a(1 + sR_3C_3) - V_0}{\frac{1}{sC_2}} + \frac{V_a(1 + sR_3C_3) - V_a}{\frac{1}{R_3}}$$

$$\frac{V_{in}}{R_2} - \frac{V_a(1 + sR_3C_3)}{R_2} = \frac{V_a(1 + sR_3C_3)}{\frac{1}{sC_2}} - \frac{V_0}{\frac{1}{sC_2}} + \frac{V_a(1 + sR_3C_3)}{R_3} - \frac{V_a}{R_3}$$

$$\frac{V_{in}}{R_2} + \frac{V_0}{\frac{1}{sC_2}} = \frac{V_a(1 + sR_3C_3)}{\frac{1}{sC_2}} + \frac{V_a(1 + sR_3C_3)}{R_2} + \frac{V_a(1 + sR_3C_3)}{R_3} - \frac{V_a}{R_3}$$

$$\frac{V_{in}}{R_2} + V_0 sC_2 = V_a \left[sC_2(1 + sR_3C_3) + \frac{(1 + sR_3C_3)}{R_2} + \frac{(1 + sR_3C_3)}{R_3} - \frac{1}{R_3} \right]$$

$$\frac{V_{in} + V_0 sC_2R_2}{R_2} = V_a \left[\frac{R_3R_2sC_2(1 + sR_3C_3) + R_3(1 + sR_3C_3) + R_2(1 + sR_3C_3) - R_2}{R_2R_3} \right]$$

$$R_3(V_{in} + V_0 sC_2R_2) = V_a \left[R_3R_2sC_2(1 + sR_3C_3) + R_3(1 + sR_3C_3) + R_2(1 + sR_3C_3) - R_2 \right]$$

$$R_3V_{in} + V_0 sC_2R_2R_3 = V_a \left[(1 + sR_3C_3)(R_3R_2sC_2 + R_3 + R_2) - R_2 \right]$$

$$V_a = \frac{R_3V_{in} + V_0 sC_2R_2R_3}{(1 + sR_3C_3)(R_3R_2sC_2 + R_3 + R_2) - R_2}$$

Because of the non-inverting configuration of an op-amp,

$$V_0 = A_f V_a$$

Where,

$$A_f = 1 + \frac{R_f}{R_1} = Gain\ of\ filter\ in\ passband$$

$$V_0 = A_f \left[\frac{R_3 V_{in} + V_0 s C_2 R_2 R_3}{(1 + sR_3C_3)(R_3R_2sC_2 + R_3 + R_2) - R_2} \right]$$

$$V_0 - \frac{A_f V_0 s C_2 R_2 R_3}{(1 + sR_3C_3)(R_3R_2sC_2 + R_3 + R_2) - R_2} = \frac{A_f R_3 V_{in}}{(1 + sR_3C_3)(R_3R_2sC_2 + R_3 + R_2) - R_2}$$

$$V_0 \left[(1 + sR_3C_3)(R_3R_2sC_2 + R_3 + R_2) - R_2 - A_f sC_2R_2R_3 \right] = A_f R_3 V_{in}$$

$$\frac{V_0}{V_{in}} = \frac{A_f R_3}{\left[(1 + sR_3C_3)(R_3R_2sC_2 + R_3 + R_2) - R_2 - A_f sC_2R_2R_3 \right]}$$

Rearrange this equation,

$$\frac{V_0}{V_{in}} = \frac{A_f R_3}{[(1+sR_3C_3)(R_2+R_3+sR_2R_3C_2) - R_2 - sA_f R_2R_3C_2]}$$

$$\frac{V_0}{V_{in}} = \frac{A_f R_3}{[(R_2+R_3+sR_2R_3C_2+sR_2R_3C_3+sR_3^2C_3+s^2R_2R_3^2C_2C_3) - R_2 - sA_f R_2R_3C_2]}$$

$$\frac{V_0}{V_{in}} = \frac{A_f R_3}{s^2R_2R_3^2C_2C_3 + s(R_2R_3C_2 + R_2R_3C_3 + R_3^2C_3 - A_f R_2R_3C_2) + R_3}$$

$$\frac{V_0}{V_{in}} = \frac{A_f R_3}{R_2R_3^2C_2C_3\left(s^2 + s\frac{R_2R_3C_2+R_2R_3C_3+R_3^2C_3-A_f R_2R_3C_2}{R_2R_3^2C_2C_3} + \frac{R_3}{R_2R_3^2C_2C_3}\right)}$$

$$\frac{V_0}{V_{in}} = \frac{A_f}{R_2R_3C_2C_3\left(s^2 + s\frac{R_2C_2+R_2C_3+R_3C_3-A_f R_2C_2}{R_2R_3C_2C_3} + \frac{1}{R_2R_3C_2C_3}\right)}$$

$$\frac{V_0}{V_{in}} = \frac{\frac{A_f}{R_2R_3C_2C_3}}{\left(s^2 + s\frac{R_2C_2+R_2C_3+R_3C_3-A_f R_2C_2}{R_2R_3C_2C_3} + \frac{1}{R_2R_3C_2C_3}\right)}$$

Compare this equation with the standard form transfer function for second-order Butterworth filter. And that is,

$$\frac{V_0}{V_{in}} = \frac{A}{s^2 + 2\zeta\omega_c s + \omega_c^2}$$

By comparing above equations, we can find the equation of cutoff frequency and overall gain for the second-order lowpass Butterworth filter.

The gain of filter is,

$$A_{max} = \frac{A_f}{R_2 R_3 C_2 C_3}$$

And the Cutoff frequency of filter is ,

$$\omega_c^2 = \frac{1}{R_2 R_3 C_2 C_3}$$

$$f_c = \frac{1}{2\pi\sqrt{R_2 R_3 C_2 C_3}}$$

Now, if we consider the value of R_2 is same as R_3 and the value of C_2 is same as C_3.

$$R_2 = R_3 = R \quad and \quad C_2 = C_3 = C$$

$$f_c = \frac{1}{2\pi RC}$$

Now if we put above values in transfer function,

$$\frac{V_0}{V_{in}} = \frac{\frac{A_f}{R^2C^2}}{s^2 + s\frac{RC+RC+RC-A_f RC}{R^2C^2} + \frac{1}{R^2C^2}}$$

$$\omega_c = \frac{1}{RC}$$

$$\frac{V_0}{V_{in}} = \frac{A_f\omega^2}{s^2 + s(3 - A_f)\omega + \omega^2}$$

From above equation, the quality factor Q is equal to,

$$Q = \frac{1}{3 - A_f}$$

We can say that, the quality factor is only depends on the gain of filter. And the value of gain should not more than 3. If the value of gain is more than 3, the system will be unstable.

The value of quality factor is 0.707 for the Butterworth filter. And if we put this value in equation of quality factor, we can find the value of gain.

$$0.707 = \frac{1}{3 - A_f}$$

$$A_f = 1.586$$

$$1 + R_f R_1 = 1.586$$

$$R_f R_1 = 0.586$$

While designing the second-order Butterworth filter above relation must be satisfy. The frequency response of this filter is as shown in below figure.

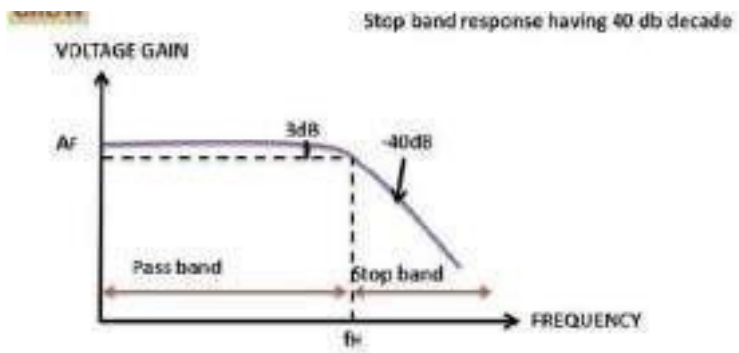

<u>Third-order Lowpass Butterworth Filter</u>

Third-order lowpass Butterworth filter can design by cascading the first-order and second-order Butterworth filter.

The below figure shows the circuit diagram of the third-order lowpass Butterworth filter.

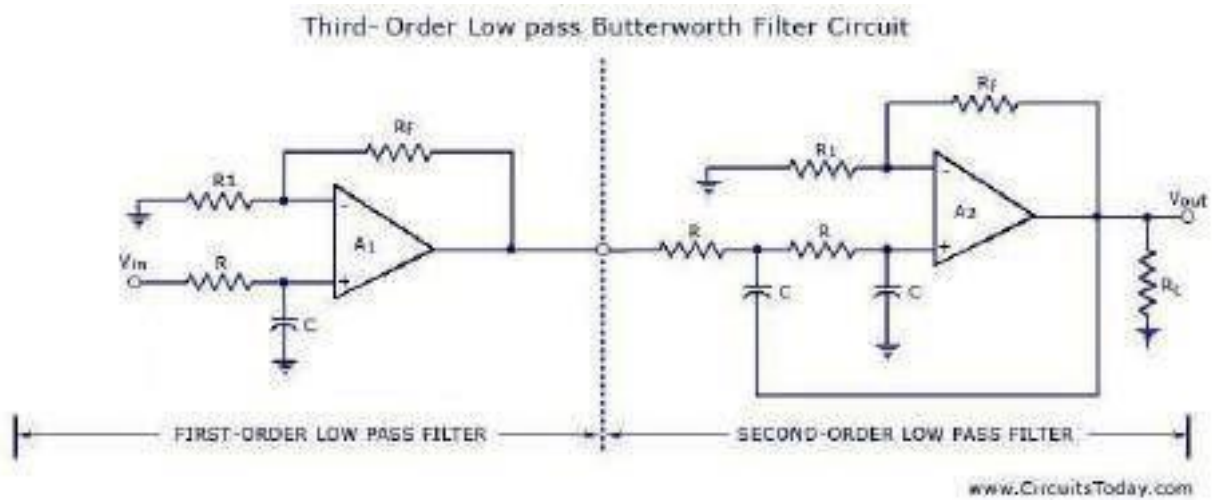

Third-order Low Pass Butterworth Filter

In this figure, the first part shows the first-order lowpass Butterworth filter, and the second part shows the second-order lowpass Butterworth filter.

But in this condition, the voltage gain of the first part is optional and it can be set at any value. Therefore, the first op-amp is not taking part in voltage gain. Hence, the figure for the third-order low pass filter can be expressed as below figure also;

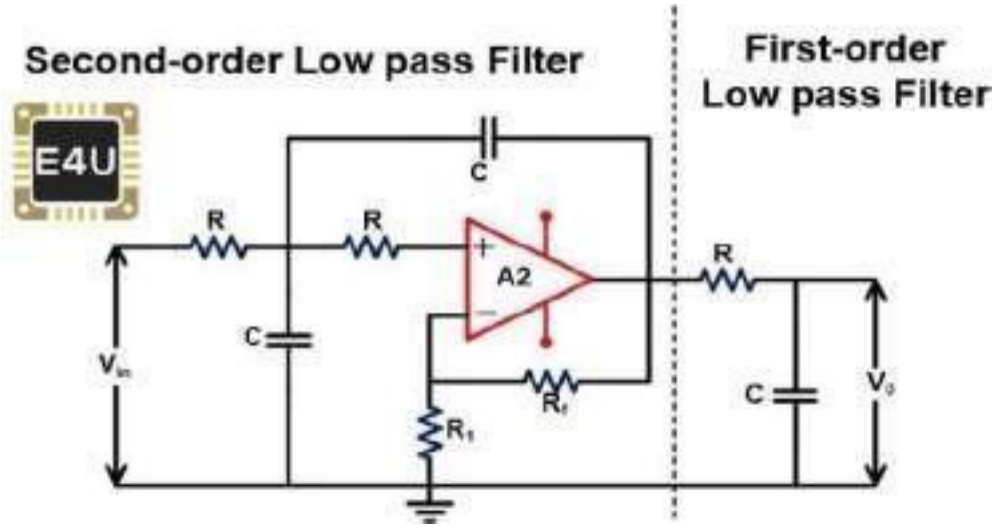

;

The voltage gain of a second-order filter affects the flatness of frequency response. If the gain of the second-order filter is kept at 1.586, the gain will down 3db for each part. So, the overall gain will down 6dB at the cutoff frequency.

By increasing the voltage gain of the second-order filter, we can offset the cumulative loss of voltage gain.

In the third-order Butterworth filter, the rate of a roll-off period is -60dB/decade. And the frequency response of this filter is nearer to the ideal Butterworth filter compared to the first and second-order filters. The frequ

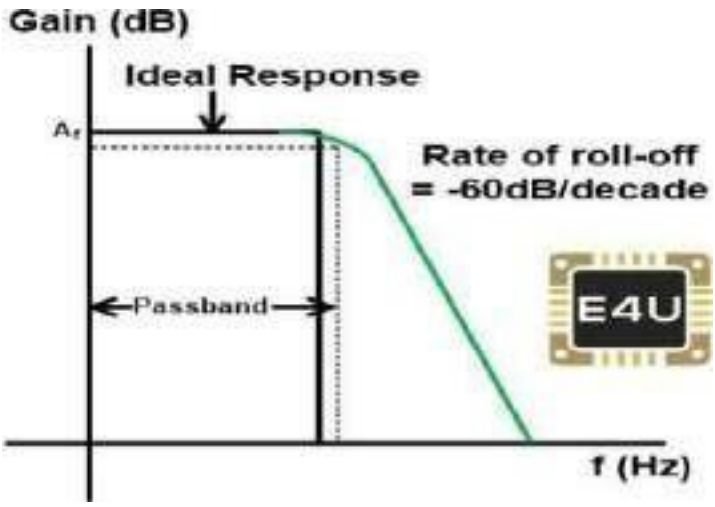

(frequency response of this filter is as shown in the below figure.)

<u>Fourth-order Lowpass Butterworth Filter</u>

Fourth-order Butterworth filter is established by the cascade connection of two second-order low pass Butterworth filters. The circuit diagram of the fourth-order lowpass Butterworth filter is as shown in the below figure.